Infinite Energy

Cold Fusion and New Energy Technology

Published by Cold Fusion Technology Vol.1, No.4 1995

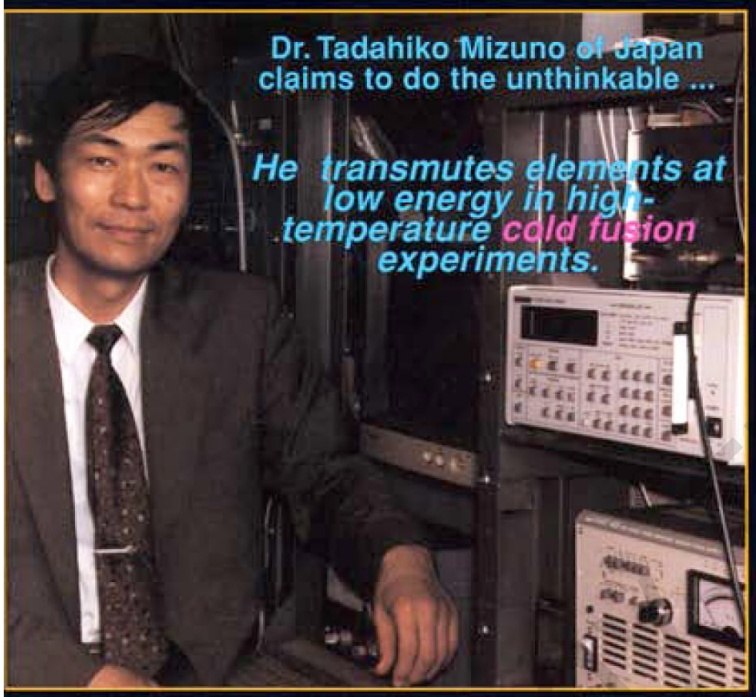

Dr. Tadahiko Mizuno of Japan claims to do the unthinkable ...

He transmutes elements at low energy in high-temperature cold fusion experiments.

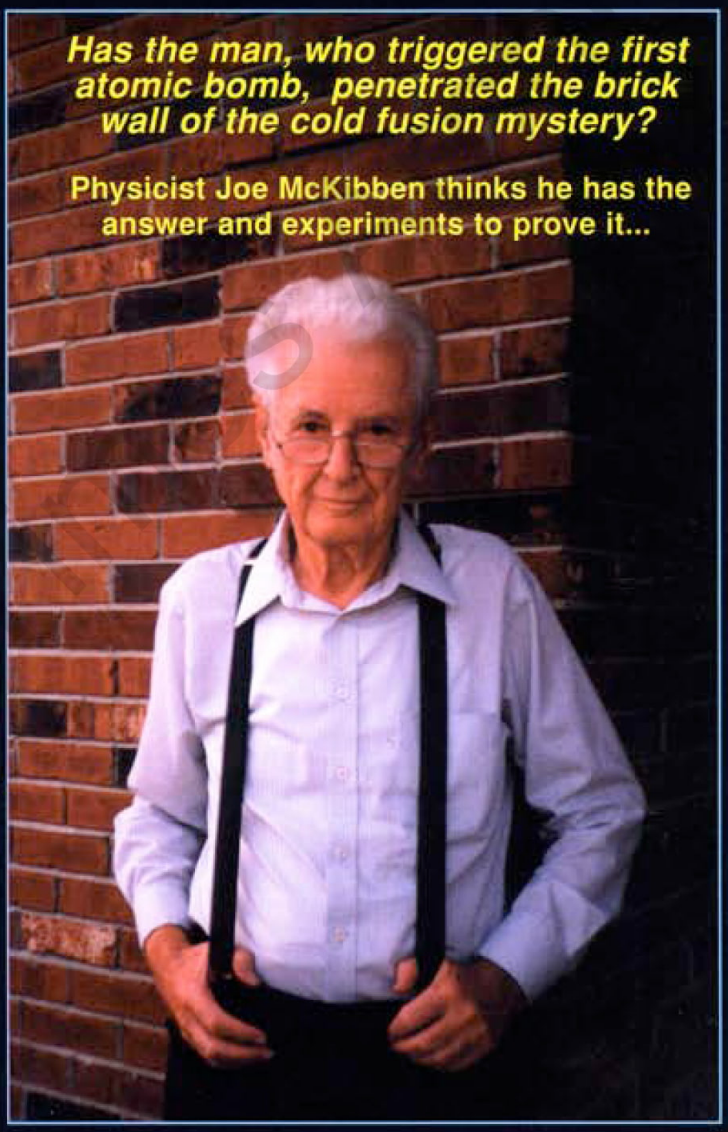

Has the man, who triggered the first atomic bomb, penetrated the brick wall of the cold fusion mystery?

Physicist Joe McKibben thinks he has the answer and experiments to prove it...

Mizuno's Solid-State High-Temperature Cold Fusion

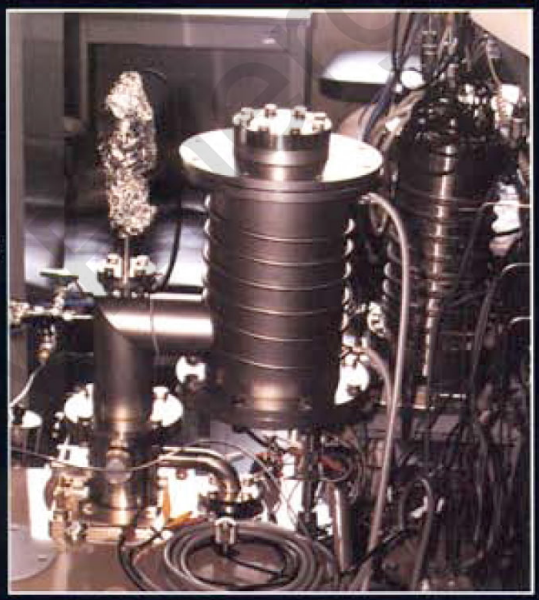

Victory! **Drs. Martin Fleischmann and Stanley Pons to be Awarded Pioneering Cold Fusion Patent in Europe.**

09
7 50644 87813 7

U.S. $5.95

Canada $7.95

Experience the excitement of scientific history in the making...

Witness key scientific and commercial presentations at the

Fifth International Conference on Cold Fusion (ICCF5), Monte Carlo, Monaco,

At the elegant Hotel Loews, 9-13 April 1995.

ORDER your set of VIDEO TAPES of ICCF5 today!

Available NOW!

Cold Fusion Technology presents some of the most significant presentations in a set of four (4) video tapes (over 8-hours total view time). The scientific slides presented by the speakers are clearly visible. Tape format is standard VHS (with U.S. NTSC recording format—may be converted by purchaser to PAL or other formats). ***Tapes are Copyright 1995 Cold Fusion Technology.*** **PRICE: only US $210 for U.S. and Canada; only US $230 for other foreign. Price includes first-class air mail. ADDED VALUE:** ***A full set of ICCF5 scientific abstracts, as well as an index of participants is included with each tape set.***

Order today! Send check or money order (US funds) to:

Cold Fusion Technology, P.O. Box 2816, Concord, New Hampshire 03302-2816 USA.

Or, provide credit card information (Master Card, VISA, AMEX).FAX: 603-224-5975

Cold Fusion and New Energy: Recent Breakthroughs, History, Science, and Technology

Lecture and Seminar by Dr. Eugene F. Mallove, **Editor-in-Chief of** ***Infinite Energy***

SUNDAY, DECEMBER 10, 1995 (1:00 to 4:00 p.m.) Admission: $15 at the door

What happened to "cold fusion"? Didn't that die in 1989 when the U.S. DOE said it was nonsense? If you believe that, you are a good friend of the Tooth Fairy! Find out what really happened and what is continuing to happen. It turns out that what Drs. Martin Fleischmann and Stanley Pons announced in Utah in 1989 was only the tip of an iceberg of momentous scientific discoveries. This exciting new R&D area continues to grow explosively, with significant involvement by corporations and institutions in the U.S., Japan, France, Italy, India, Russia, and China. New technology developments and scientific discoveries are being made monthly and reported in the peer-reviewed scientific literature. They herald the imminent end of the fossil fuel age – and a lot of what we *thought* we knew about physics. Engineer-author Dr. Eugene Mallove of ***INFINITE ENERGY*** magazine will report on the latest information that is now pouring in from research centers around the globe. He will show startling videos of commercial developments and experiments.

Location: CONTINUING EDUCATION CENTER, RUTGERS UNIVERSITY, NEW BRUNSWICK, NEW JERSEY

For further information, contact: Art Wagner – 908-873-8429

New Energy Times Archive

Infinite Energy

Cold Fusion and New Energy Technology

Volume 1, No.4, Sept./Oct. 1995

Publisher and Editor-in-Chief
Eugene F. Mallove, Sc.D.

Associate Editor
Hal Fox
(Fusion Information Center, Salt Lake City, Utah)

Contributing Editors
Lawrence P.G. Forsley (Virginia)
Jed Rothwell (Georgia)
Christopher Tinsley (UK)

Assistant Editor
Stuart Norwood

Art and Graphics
Rhonda Eklund
Pamela J. Veenstra

Scientific Advisory Board
Dr. Robert W. Bass
Thousand Oaks, California
Dr. John O'M. Bockris
Texas A&M University
Dr. Dennis Cravens
Vernon Regional College, Vernon, TX
Dr. Peter Glück
Institute of Isotopic and Molecular Technology, Romania
Dr. Edmund Storms
ENECO

INFINITE ENERGY Magazine *(ISSN 1081-6372) is published six times a year by Cold Fusion Technology, P.O. Box 2816, Concord, New Hampshire 03302-2816. Subscription price: $29.95 U.S. and Canada, $49.95 other foreign. POSTMASTER: Send address changes to INFINITE ENERGY, P.O. Box 2816, Concord, NH 03302-2816.*

INFINITE ENERGY Magazine
P.O. Box 2816
Concord, NH 03302-2816
Phone: (603) 228-4516
Fax: (603) 224-5975
E-Mail:
INTERNET:76570.2270@compuserve.com

PRINTED IN THE USA

Copyright © by Cold Fusion Technology.
All rights reserved.

Table of Contents

Volume 1, Issue #4 Sept./ Oct. 1995

Breaking Through, Editorial 3

Letters 5

Pons & Fleischmann Patent to be Approved in Europe 6

80-to-1 Cold Fusion Demo at HF Meeting!
Jed Rothwell 8

Dr. Mizuno's Solid-State Cold Fusion (Technical Paper)
Tadahiko Mizuno, et al 9

Briefs 12

FEATURES

Can Cold Fusion Be Catalyzed by Fractionally Charged Ions?
Joseph L . McKibben 14

The Piantelli Patent
F. Piantelli, et al 24

ICCF5 Talk by Dr. Edmund Storms 32

Magnetic Motor— U.S. #5,436,518 40

New Products —Acoustic Levitation 42
Dr. David Deak

Calendar 46

Washington Watch 48

COMMENTARY

The New Scientific Age
Dr. Brian O'Leary 49

What's All the Static?
Jeffery Kooistra 51

Vision 2020 "Cold Fusion"
Dr. M. Srinivasan 52

Review

"*Too Close to the Sun*"(CBC/BBC Cold Fusion Documentary)
David Moon 53

Nucleon Cluster Structures
Ronald Brightsen 55

Potapov's Thermogenerator —Update
Translations, Christopher Bird 56

COVER:
Dr. Tadahiko Mizuno in his laboratory with test apparatus used in his patented solid-state cold fusion process.

Dr. Joseph L. McKibben, Los Alamos National Laboratory, retired. On July 16, 1945, he pulled the switch for the first atomic bomb test. Now he theorizes about cold fusion.

New Energy Times Archive

By Eugene F. Mallove, Sc.D.

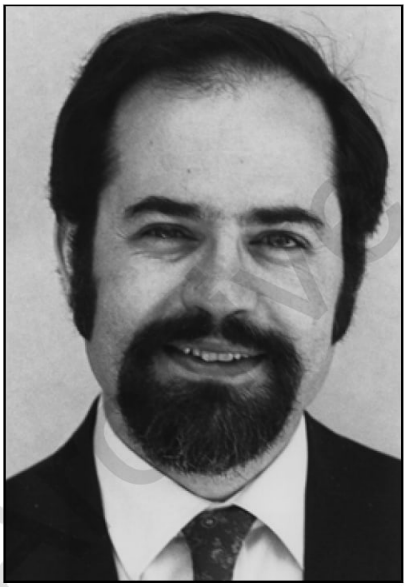

Ignition! We have lift-off!

Historians of science may well record October 1995 as *the* most significant turning point in the cold fusion saga. It was the month— just before the 100th anniversary of Roentgen's discovery of x-rays, that cold fusion ignited and left its grammar school years behind. It was childhood's end for cold fusion.

At a major gathering of some 500 hot fusion researchers in Champaign, Illinois (September 30 — October 5), Clean Energy Technologies, Inc. (CETI) demonstrated the sustained, continuous operation of a light water cold fusion cell with an output-to-input power ratio of 80/1! For four days of the conference, the little cell put out 4 to 5 watts of thermal energy. There were only 60 *milliwatts* of direct-current electrical power going in. As we say, "How do you like them apples!?"

Many commented that such a cell was not very far from being able to generate electricity thermo-electrically, which could be fed back to sustain the cell to make it stand alone. They were right. Such a feat will surely be done before much longer.

The CETI cell was definitely a hit at the Symposium on Fusion Engineering (SOFE '95), but the poor hot fusioneers at the conference were roughly in the position that horse drawn carriage dealers would have been back in 1910 when a few gasoline-powered carriages showed up. Now, of course, the CETI cell and its cousins are poised to begin to send the sleek, gas-guzzling offspring of the 1910 motorcars to the antique museums.

The hot fusion people didn't really know what to make of the CETI cell, though much excitement attended CETI's booth. They were not ready to "jump ship," even as their own ship was sinking. This month came the good news that the U.S. Congress really had begun to pull the plug on the the U.S. tokamak hot fusion program. Funds were severely cut back for the beleaguered program, whose proponents had so denigrated cold fusion at its inception.

Then came the October Surprise—the glorious news that the European Patent Office had given formal notice to ENECO of Salt Lake City that it would finally grant the pioneering Pons & Fleischmann cold fusion patent. ENECO owns the world-wide licensing rights to this umbrella patent. This action by the EPO is nearly certain to have a sobering effect on officials at the U.S. Patent Office, who have been avoiding the in-evitable: the granting of a U.S. patent to Drs. Pons and Fleischmann.

The week after the cold fusion triumph at the SOFE '95 meeting, Fiat Motor Corporation sponsored a cold fusion gathering in Italy. There were contingents from the U.S., Japan, and of course from the expanding community of cold fusion researchers in Italy. Professor Francesco Piantelli of the University of Siena was there, whose work on high temperature gas-activated cold fusion is supported by Fiat. In this issue of *Infinite Energy*, we reproduce the entire first patent of Piantelli et al, which was granted last August.

At the October CF conference in Italy, Japanese researchers announced that the New Hydrogen Energy program in Japan, which had been funded by the Japanese government at a level of $30 million over four years, was now to begin receiving $100 million per year.

Meanwhile, back in the U.S. of A., *not one single cent* was officially being spent on cold fusion research by the U.S. Department of Energy. It was learned, however, that Energy Secretary Hazel O'Leary had arranged for a Washington-based investigation service to keep track of how various reporters were treating DOE in their stories. (We wonder if *IE* made it into its report!) DOE gave $46,000 to the Washington-based Carma International, an investigative service. (Yes, dear cold fusion researchers in India — you of all *ten* scientific institutes there that read *IE*, that *really is* the service's name —Carma, with a "C"!)

Coming up very soon is the Power-Gen '95 conference at the Anaheim Convention Center, Anaheim California, December 5-7. There CETI is again expected to conduct an impressive demonstration of its patented Patterson Power Cell technology. It is possible —but please don't rush them!— that they will have a more powerful cell to show. There will be over 850 exhibitors and some 14,000 attendees at this "World's Largest Electric Power Industry Event." There at the CETI booth, fossil fuel moguls will be treated, we trust, to a significant "profile of the future." We hope they can read the writing on the wall.

*"**Power-Gen** attracts managers, engineers, and technical operating staffs who are seeking new information and technology that can help them meet the enormous challenges facing today's power generation industry. They are the industry leaders whose responsibilities include designing, building, operating, and maintaining power plants throughout the world."*

In this issue of *IE* we are extremely pleased to have Dr. Joseph McKibben (Los Alamos National Laboratory, retired) present his heretical theory of cold fusion. It is based on what he says is very strong experimental evidence for the existence of fractionally charged particles. If he's right—*and he shows exactly how his theory can be tested*, he should win two Nobel prizes: one for Physics, and one for Chemistry. Right or wrong, McKibben's theory is extremely carefully thought out and is guaranteed to stir up debate in cold fusion theory circles. It is awesome to consider that McKibben was the man who ignited the nuclear age when on July 16, 1945 he set the timer ticking for the Trinity bomb test at Alamogordo. Can he also be the man who holds the key to the cold fusion and low-energy transmutation mystery?

There have been so many recent developments in cold fusion and new energy that it is difficult even to outline them. One of my favorite shockers is U.S. patent #5,436,518, granted July 25, 1995 to Teruo Kawai of Tokyo, Japan and assigned to the Nihon-Riken Co., Ltd., also of Tokyo: "Motive Power Generating Device."

New Energy Times Archive

If you go back to pages 48 and 49 of *IE* #1 (March/April 1995), you can read the transcript of an October 1993 FUJI television documentary program in which Professor Kawai appears:

"Where did this extra output come from? This is really a revolutionary find!...We checked to see [that] same readings were gained on other meters, not just the ones we used in our initial experiments....We've discovered that these secrets were present in our surroundings (nature) all along...We can now use it to help restore the environment that man has been abusing."

He was talking *not* about a gas, solid, or liquid cold fusion experiment, but about an apparently over-unity electrical motor that puts out more mechanical energy than its electrical input power. The U.S. patent granted to Kawai is clear in its first claim: "A motive power generating device for transforming magnetic energy into motive power..." In the body of the patent, performance figures are quoted: input electrical power of 19.55 watts and [mechanical] output of 62.16 watts. That 318% Over-Unity in a device in which there should not be one single erg of excess power!

Were the sources of this information not so credible and the supporting information about similar machines not so broad at this time, we wouldn't spend one minute discussing this patently "outrageous" claim. But is the magnetic motor over-unity claim any more outrageous than that a cell of water can continuously put out approximately five watts of extra power at an 80/1 ratio —seemingly indefinitely? Those who insist that cold fusion *has* to be a benign, novel nuclear process of heat generation may recoil in horror, but until we can find the products of the nuclear reactions at a level commensurate with the excess energy, there is no guarantee that such products ever will be found at those levels. Then what? Time to re-examine preconceived ideas!

Where is this all going? Obviously, at a bare minimum, it looks as though physics is due for a major overhaul. More important, the world—*as we know it*— is certain to end, and end perhaps very soon. It shouldn't take very long for these outrageous *free* or *nearly free* energy devices to bring down the entire energy infrastructure of global civilization. Good riddance to it! The revolution will go like a raging fire—out of control, as soon as the conflagration is triggered by emerging technological devices: home heaters, electricity generators, and transportation propulsion systems. It could be a replay of the personal computer revolution or the cyberspace revolution—only faster.

Nor can planet Earth alone contain what is about to happen. The free energy revolution will ignite a true Golden Age of space exploration. With new sources of power to boost payloads into Earth orbit and from there onto rapid trips to the Moon, to the planets, and beyond, Humankind will at last be unbound from its fragile birthplace. We will have entered the Age of Infinite Energy— with no limits to growth and with no artificial boundaries to human knowledge.

∞

Nothing great was ever achieved without enthusiasm.

Ralph Waldo Emerson

(Our thanks to Hal Fox for bringing Emerson's wisdom to our attention.)

Institute for New Energy

is an international organization to promote new and renewable enegy sources. Its monthly newsletter is

New Energy News,

reporting worldwide on all facets of new and enhanced energy. Memberships in INE are $35 per year for individual, $60 for corporations & libraries, and includes 12 issues of *NEN*

Fusion Facts,

a monthly scientific newsletter covering worldwide research in the cold fusion phenomena.

Subscriptions are $300 per 12 issues.

Fusion Information Center
P.O. Box 58639
Salt Lake City, UT 84158

Also available, *Cold Fusion Impact in the Enhanced Energy Age*, a book about the near future of the world energy situation. Phone for information: 801-583-6232

INVENTORS

Are you looking for a proven team who will help protect and develop your cold fusion invention?

MANUFACTURERS

Do you need information on cold fusion inventions and processes that are available for commercialization?

Contact **ENECO**

We are an intellectual property clearinghouse serving the interests of both cold fusion inventors and commercial developers throughout the world. Our staff is actively pursuing allowance of U.S. and international patents in most areas of cold fusion effects, including the original, pioneering work of Pons and Fleischmann.

Call us to discuss our development and licensing programs: Phone: (801) 583-2000, Fx: (801) 583-6245

ENECO

391-B Chipeta Way
Salt lake City, Utah 84108

New Energy Times Archive

Letters to the Editor:

I and Dr. Ohmori obtained recently very nice results for a light water experiment, After electrolysis we detected the reaction products of the electrode and precipitation at the bottom of the cell. We used 6 cm^2 and 0.2 mm thickness of Au plate scratched by a glass fragment and immersed in 1 N Na_2SO_4 solution that were treated with very high analytical grade of chemical reagents: electrolyzed during one week 200 mA/cm^2 of current density at 303 K in a quartz cell. After that, we estimated the products by SIMS. Figure A [*Not shown here.—Ed.*]shows the mass spectrum of the Au surface; you can see several elements especially Fe, Hf, Os and Pt can be strongly said the reaction products because their isotope ratios were completely different from the natural one of fig. B. And the total amounts are shown in fig.3: you see the beginning surface was pure gold of 99.9999%, however they were completely changed. I will show you more accuracy after the EPMA analysis.

Dr. Tadahiko Mizuno
Dept. Nuclear Eng., Fac. Eng.
Hokkaido Uniiv. Kita-ku N-13 W-8
Sapporo 060 JAPAN

Fig.B		**Meas. Abund.**	**Natural Abund.**
Hf	174	32.3	0.16
	176	34.7	5.21
	177	2.6	18.56
	178	20.3	27.10
	179	2.1	13.75
	180	7.9	35.2
Os	184	0.8	0.018
	186	1.0	1.59
	187	0.5	1.64
	188	1.7	13.3
	189	0.3	16.1
	190	44.3	26.4
	192	51.4	41.0
Pt	194	56.6	32.9
	195	12.5	33.8
	196	22.9	25.2
	198	7.9	7.19

Fig. 3		
	Os	36.9%
	Pt	21.2%
	Au	18.2%
	C	11.2%
	S	6.8%
	Si	3.3%
	Fe	0.7%
	Hf	0.6%

Cold Fusion & New Energy Lectures

by Dr. Eugene F. Mallove
***IE* Editor-in-Chief**
and author of *Fire From Ice*
Generate lots of excess heat (and new-thinking!) in your scientific, engineering, business, civic, or religious organization. Call
Cold Fusion Technology at: 603-228-4516;
Fax: 603-224-5975

Since I heard the news in 1989, I did not stop thinking about cold fusion. I was waiting for this kind of breakthrough since I can remember. I am helping a student doing an experiment for a science fair. Having a chance to be part of it, is overwhelming, to say the least. Any help I can provide to help push these great discoveries, I will give. Thank you for your courage. Great books, magazine, and Web pages by the way...

Simon Filiatrault
Bellefeuille, Quebec, Canada

Thank you once again for taking time out to give me further insight into current activities in this field. I would like to help. I am a small businessman. A mechanical engineer by training, I have a successful technology implementation track record. As stated during our discussion, I am keenly interested in these phenomena. Frankly, I do feel like a child again. I clearly remember how disappointed I was when "Confusion in a Bottle" seemed the legitimate position. Thanks to your good work, we can push through all the obstacles planted by the opposition.

I am very interested in the theoretical basis of these effects. However, I strongly agree that products should be developed right now. Let the science catch up. It has been my experience that it is amazing how many things mankind has accomplished, knowing so little.

I will find a way to make a contribution to this field. I have the passion, ability, and resources for it. Please add me to your mailing lists. Please add me to your subscription lists. Please feel free to point me to folks who could use some support.

Chris Kuelzow
Keyport, New Jersey

Frontier Perspectives

The history of science has shown repeatedly that novel scientific discoveries now believed to be true were typically disregarded in their time. Unfortunately, the present is no exception; frontier scientists who dare to work at the edges of science face extraordinary obstacles. The Center for Frontier Sciences was establishes in 1987 to coordinate globally information exchange, networking, and education on frontier issues of science, medicine, and technology. The Center helps engender greater openness to novel scientific claims in several areas, including bioelectromagnetics, the mind-matter interrelationship, complementary medicine, and new energy technology.

If you wish to receive Frontier Perspectives regularly, 2 issues per year, as well as notification of events hosted by the Center, the annual subscription fee is $30.00.

Center for Frontier Sciences
Temple University,
Ritter Hall 003-00
13th & Montgomery Streets
Philadelphia, PA 19122 USA
Telephone: (215)-204-8487

On March 19, 20 and 21 of 1995, I and a long time technical associate, Leon Sojka of Portland, Oregon, met with the principals of CETI and with Dr. Dennis Cravens. We worked on installing a state-of-the-art computer data gathering system for their test unit, which was shown weeks later at the Fifth International Conference on Cold Fusion.

The computer system, alas, was not viable during the conference because of some damage that occurred during shipping. So, as attendees of ICCF5 observed, Dr. Cravens had to use direct instrumentation. However, there were several fruitful results from this computer data-gathering attempt, which I would like to describe:

During the process of installing the computer data-gathering system, a noticable "cross talk" between the thermisters and the thermocouples was observed during electrolysis. This cross talk led Mr. Sojka and I to believe that the thermal generation numbers we observed at the time, were not reliable. Dr. Cravens pointed out that he had not seen this cross talk before, and was somewhat distressed. (For a complete discussion of what was done to remedy this problem, please see Dr. Cravens' write-up in *IE*#2.)

Continued on page 7

New Energy Times Archive

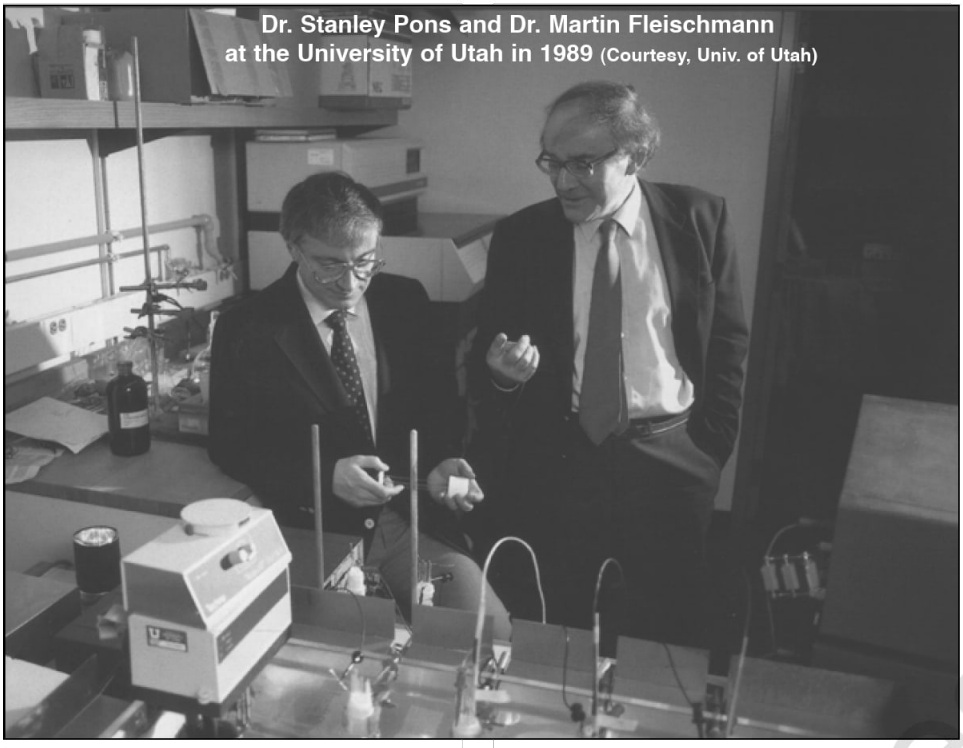

Dr. Stanley Pons and Dr. Martin Fleischmann at the University of Utah in 1989 (Courtesy, Univ. of Utah)

MILESTONE IN THE HISTORY OF COLD FUSION !

EUROPEAN PATENT OFFICE TO GRANT THE ORIGINAL PONS-FLEISCHMANN PATENT!

THE CLOCK IS NOW TICKING FOR ACTION BY THE U.S. PATENT OFFICE.... HOW MANY MORE MONTHS (OR YEARS!) WILL IT TAKE?

On October 30, 1995, *INFINITE ENERGY* Magazine received the following historic announcement from ENECO of Salt Lake City.

ENECO RECEIVES NOTICE OF INTENT OF PATENT GRANT FROM EUROPEAN PATENT OFFICE ON ORIGINAL PONS-FLEISCHMANN COLD FUSON INVENTION

Salt Lake City, Utah October 30, l995 -- Fred Jaeger, President of ENECO, Inc. today announced, "The European Patent Office has issued a Notice of Intent of patent grant on the original Pons-Fleischmann cold fusion patent." ENECO acquired the exclusive world-wide license rights to the Pons-Fleischmann cold fusion technology from the University of Utah in November, 1993, and has been pursuing patents in the U.S. and abroad on these technologies.

"The notice of intent of grant of the European patent is a significant milestone on ENECO's path of commercializing cold fusion devices," says Jaeger. "A significant amount of private and governmental cold fusion research continues to be aggressively pursued throughout Europe. Once the European patents issue, ENECO plans to capitalize on the economic strength of the European community through the sale of research and development licenses that will evolve into manufacturing licenses. The Pons/Fleischmann patents will be the pioneering patents in the cold fusion field."

FINALLY! COLD FUSION IS RECOGNIZED BY A TOP U.S. SCIENCE LEADER --

CONGRESSMAN ROBERT WALKER, REPUBLICAN OF PENNSYLVANIA AND THE CHAIRMAN OF THE U.S. HOUSE OF REPRESENTATIVES SCIENCE COMMITTEE

In an interview in the October 1995 (U.S.) magazine, ***Popular Science***, Congressman Walker said:

"One of the first bills to come out of my Committee was the Hydrogen Future Act. Hydrogen seems to be a potential energy resource with benign environmental properties."

"I'm also personally interested in the so-called cold fusion area. It's not fusion, obviously. **But there's something that's producing additional heat, and it's being found in laboratory after laboratory.** [*IE* emphasis]No one at this point can explain it. The hydrogen bill sets aside some monies to go into highly innovative research such as this."

New Energy Times Archive

However, after discussion it was decided that perhaps this cross talk had developed as the epoxy Dr. Cravens used to coat the thermistors and thermocouples saturated with $LiSO_4$. This did not, however, present an insurmountable problem for Mr. Sojka and me, as we were able to install the computer data gathering system using the resistor heating element which Dr. Cravens had in the cell for calibration runs.

This did give Mr. Sojka and me a "hands on" feel for the experimental set-up. In brief we found the set up capable of recovering 87% of the I^2R power in terms of M-dot*Delta-T*C_p output. Our observations were that the readings of the thermisters and thermocouples agreed with each other within +/- 0.1 degree C. (Giving a +/- 2% error on the thermometry at a 5 degree C delta-T). We also checked the accuracy of the expensive lab flow meter several times, and felt confident it was within +/- 1% also.)

Thus it would be my judgement that the instrumentation overall would easily fit within a +/-5% absolute window. After a variety of calibration runs between 2 to 8 watts input via the calibration heater, Mr. Sojka and I decided (late the third day of our visit) to try the electrolysis one more time. Again, we noted that as soon as the electrolysis was started, the readings from the thermocouples and thermisters diverged noticibly, and the immediacy of the effect on the computer data was so pronounced as to leave little or no doubt about the nature of the "cross talk" induced error. However, by some fortuitous circumstance, Mr. Sojka and I did manage to continue.

We maintained the electrolysis long enough to start the "reaction." Also, by another fortuitous accident, we happened to turn off the electrolysis power before we turned off the computer data gathering. In point of fact, when we were making these moves with the system, we had arranged the output from LabTech Notebook(TM) such that we were looking at two graphs of temperature versus time, one for the delta-T across the cell from the thermocouples and one for the delta-T by the thermisters.

The surprise we had waiting for us was to observe (upon turning off the electrolysis) the readings from the thermisters and the thermocouples as they jumped from their "cross talk"- influenced values, up to a value of about 5 degrees C each (within +/- 1%), with a very gradual decline with time. Several minutes of turning on the electrolysis and turning it off ensued, with Mr. Sojka and I scratching our heads and being rather astounded!

The reason for our being *astounded* was that the electrolysis power input was 0.03 watts! (Measurement both with direct reading ammeters and voltmeters and the computer data gathering system.) And the combination flow (about 13 ml per minute) and delta-T and previously measured system losses would lead us to believe we were looking at a net thermal generator of around 5 watts within the boundaries of the CETI cell.

Unfortunately, our allotted time came to an end as we raced to the Dallas-Ft.Worth airport to catch our planes on the 21st of March. But as Mr. Sojka and I chased a

Continued on page 41

America's ONLY Inventor's Magazine!

Inventors

DIGEST

Since 1985 ***INVENTORS' DIGEST*** has been giving inventors —just like you — the information they need!!! Every good idea deserves a chance...but where to start? Take advantage of our special subscription offer and your questions will be answered!

•••••••• 1-800-838-8808 ••••••••

SPECIAL NO-RISK OFFER!!!

Call today and we'll put your first issue in the mail...take a look...you're under no obligation (except to your invention!)!!! Six issues per year. Subscription rate: $22/yr.
INVENTORS' DIGEST, 4850 Galley Rd., Ste.209
Colorado Springs, CO 80915

Order your set of *ICCF5 Video Tapes* and/or *MIT Cold Fusion Day VideoTapes* Today!

(see ads, pages 1, 59, and 12)

You will *not* be disappointed!

Now ICCF2 tapes available !

Cold Fusion Technology
Box 2816
Concord, New Hampshire 03302-2816

Fax: 603-224-5975

New Energy Times Archive

The Penultimate Cold Fusion Demonstration— at a *Hot* Fusion Meeting! •••• 80/1 = Out / In

COLD FUSION DEMO AT SOFE '95
by Jed Rothwell

In our last issue we mentioned that a cold fusion cell would be demonstrated during a big hot fusion conference: the 16th biannual Symposium on Fusion Engineering (SOFE '95) Oct. 1 - 5, at Champaign, Illinois, which is sponsored by the IEEE, the American Nuclear Society, and the University of Illinois. Most of the conference was devoted to "hot" fusion topics like fusion blanket technology, fusion neutronics, tritium breeding, and ITER, but there were also two papers, a panel discussion, and a demonstration of cold fusion. The papers were from Professor Peter Hagelstein (MIT), and Dr. Edmund Storms (Los Alamos National Laboratory - retired). Dr. Kohji Kamada (National Institute for (hot) Fusion Science, Nagoya) was also scheduled to present a paper on cold fusion, but it appears he was unable to make it.

The demonstration was performed by Professor George Miley's group from the University of Illinois. They showed a Clean Energy Technologies, Inc. (CETI) light water device, which is one of the most robust and reliable cold fusion devices. A similar cell was demonstrated at the Fifth International Conference on Cold Fusion (ICCF5) in April 1995. A CETI cell at another lab recently ran uninterrupted for seven weeks, producing a steady 20 watts excess, which adds up to 85 megajoules. That should get the attention of the hot fusion scientists, for several reasons, especially:

- **85 megajoules is 14 times more energy than the biggest hot fusion test on record produced, at the Princeton Plasma Physics Laboratory (PPPL) in 1994.**
- **The cold fusion device costs a few dollars to manufacture, and it is roughly the size of a person's thumb. The hot fusion device cost billions to manufacture and it is as big as a factory.**
- **The cold fusion device produces ten times more energy out than you put in, whereas the claimed hot fusion output is only 0.3 times input (and it is in the form of deadly radiation).**
- **Hot fusion devices produce a huge flux of deadly radiation, whereas cold fusion produces only very low levels of radiation, which can easily be tuned out or shielded.**

I am glad to see the two camps finally getting together in the U.S. They have been cooperating in Japan for many years. It is about time the hot fusion people got serious about cold fusion, because the commercial prospects for cold fusion have never looked better, and dozens of Japanese corporations are working on cold fusion, whereas hot fusion is only supported by the national governments. Government support for hot fusion is rapidly waning in the U.S., Europe and Japan. The PPPL (Princeton Plasma Physics Lab) recently laid off 246 scientists. Robert Walker (R-Pa), the chair of the U.S. House Science Committee, has been lukewarm towards hot fusion. In the October 1995 issue of Popular Science he says, "I'm also personally interested in the so-called cold fusion area. It's not fusion, obviously. But there's something that producing additional heat, and it's being found in laboratory after laboratory."

The CETI demonstration cell at SOFE '95 produced steady excess heat. With only 60 milliwatts electrical input, output ranged from 4 to 5 watts, 80 times input. In a flow calorimeter, the Delta-T temperature rise was 4 to 5 degrees C, because the flow rate was set at 14.28 ml/min (60 joules = 14.28 calories). Input was 3 volts at 0.02 amps. Calibrations confirmed that this input alone will raise the Delta-T water temperature by less than 0.06 degrees, because this is an open cell and half of the input energy is carried off in free hydrogen and oxygen.

Professor Miley's group worked with scientists in the Materials Sciences Department independently fabricated CETI thin film cathode beads and observed a cold fusion effect, but in most power domains the magnitude of the reaction was not as great as with the beads from CETI. For the purpose of the demonstration they used a cell and beads on loan from CETI.

The demonstration was well received by most conference attendees. The audience snapped up literature packs in the conference booth, and many scientists and engineers had a close "hands-on" look at the instruments. CETI demonstrated a similar cell at the Fifth International Conference on Cold Fusion (ICCF5) in April. That cell produced 10 times input. CETI allows people to take their own measurements of power and temperature. CETI's patented cathodes have now been independently replicated and verified by the University of Illinois, and sample beads from CETI have been independently tested by U. Illinois and other groups.

Five watts is a significant, macroscopic power level. When output is 80 times greater than input, and output is macroscopic, this eliminates any possibility that the effect is due to instrument error. The CETI glass cell is roughly the same size as a 4-watt night light bulb. When a night light has been turned on for a while it is warm to the touch, whereas 60 milliwatts in an object of that size is not enough to produce palpable heat. You can feel a 5 degree C temperature rise, but you cannot feel a temperature difference of only 0.03 degrees.

The SOFE '95 conference also featured papers on cold fusion and a panel discussion with three cold fusion scientists: Dr. Edmund Storms, Prof. Yeong E. Kim (Purdue) and Dr. Dennis Cravens, and one member of the 1989 DoE ERAB panel: Prof. Howard K. Birnbaum of the University of Illinois. We will present extracts from the panel discussion in the next issue. Birnbaum, along with the other ERAB members, opposed cold fusion in 1989 and he remains adamantly opposed today— saying that it is "not my job" to determine the reality of cold fusion experiments. He was not convinced by the demonstration, perhaps because he has *not* taken the opportunity to look at it! When the demonstration was set up at the University before the SOFE conference he was invited to see it, but he declined. During the conference he was not seen at the booth and he did not talk to the people operating the equipment.

CETI plans to do the next demonstration at the **Power-Gen '95 Americas** conference in Anaheim, California, December 5 - 7, 1995. They hope to prepare a larger and more powerful cell in time for this demonstration. The Power-Gen conference is the world's largest electric power industry trade show, attracting over 850 exhibitors, 14,000+ attendees from 75 countries, and 250 conference paper presentations (for information about Power Gen call 713-621-8833).

New Energy Times Archive

Dr. Tadahiko Mizuno's Solid-State Cold Fusion

Infinite Energy is proud to be able to publish this pioneering technical paper in low-energy transmutation. —*The Editors*

Formation of ^{197}Pt Radioisotopes In Solid State Electrolyte Treated by High Temperature Electrolysis in D_2 Gas

Tadahiko Mizuno[(1)], Koich Inoda[(1)], Tadashi Akimoto [(1)], Kazuhisa Azumi[(1)], Masatoshi Kitaichi[(1)], Kazuya Kurokawa[(1)], Tadayoshi Ohmori[(1)] and Michio Enyo[(2)]

[(1)] Hokkaido University, Kitaku, North 13 West 8, Sapporo 060 Japan
[(2)] Hakodata National College of Technology, Tokuracho 14-1, Hakodate 042 Japan

A proton conductor, a solid state electrolyte made from oxide of strontium, cerium, niobium and yttrium, was charged in a hot D_2 atmosphere. Anomalous radioisotopes were detected in all samples charged with an alternating current with voltages ranging from 5V to 45V, at temperatures ranging from 400 to 700 C. No radioisotopes were observed in samples charged in a hot H_2 atmosphere.

Cold fusion, a nuclear reaction in the solid state, has been confirmed by many experiments. What is most needed now is to obtain the precise, quantitative relationship between each potential nuclear reaction and its corresponding reaction product. We submit that the ideal way to do this is to observe as many parameters as possible simultaneously on-line: heat evolution; neutron emission; tritium generation, and so on. Unfortunately this is very difficult to do, because the phenomenon is so hard to reproduce and control. Even when it has been possible to measure several parameters at once, the amounts of reaction products are very low and often close to or under the limits of detection, making quantitative calibration difficult. Therefore, the best technique has been to analyze radioactive products from samples before and after the experiment, rather than on-line in real time.

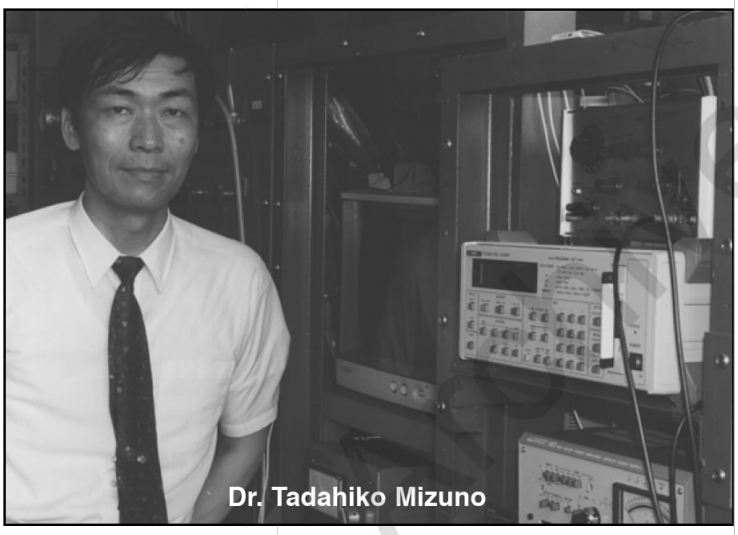
Dr. Tadahiko Mizuno

In the present work, samples were made from a mixture of metal oxides of Sr, Ce, Y and Nb, according to procedures worked out by Iwahara et al. [1,2,3] These powdered oxides were first mixed, and then sintered in an electric furnace at 1400 °C in air for 16 hours. The samples were pulverized and mixed, then alcohol was added. They were placed in a press and formed into disks of 20mm diameter and 1mm thickness. These plates were again sintered at 1300-1480 °C in air for 16 hours. Sample densities ranged from 3.0 to 5.2. The theoretical density for a perfectly sintered sample is 5.8. Both sides of the sintered sample were coated with porous Pt film by one of two methods: 1. By painting a Pt organic compound and deposition at 700 °C; or 2. By coating with Ar sputtered onto Pt in a vacuum. The resulting Pt film thickness was 0.15 - 0.3 μm. The film is porous and has a very rough surface, and hydrogen gas easily passes through the film to reach the ceramic surface. A schematic of the measurement system is shown in Figure 1, and a schematic of the reactor is shown in Figure 2.

Experimental procedures were as follows: (1) The reactor cylinder is evacuated with a rotary pump, followed by a diffusion pump (with liquid N_2 trap) to 2×10^{-5} Torr. (2) The temperature of the sample is raised to 400 ~ 700 °C (3) Gas is introduced into the cylinder at 0.1 ~ 50 Torr. (4) The sample is charged with EPD power at 5V ~ 45V a.c., with frequency set between 10^{-4} and 1 Hz depending on the sample temperature and thickness. (5) All the samples were tested with a Ge(Li) detector for the gamma radiation before and after the electrolysis.

All samples were tested for emissions across the full gamma radiation spectrum. Typical results are shown in Fig. 3: (B) is before electrolysis, (A1) and (A2) are after electrolysis. A clear peak appeared in Fig. 3 (b) at 76.8keV. The peak is only obtained after electrolysis in deuterium gas. It was not observed with hydrogen gas. This peak may be interpreted as coinciding with the radioisotopes ^{197}Pt, ^{153}Sm and ^{155}Sm. However, we do not believe it was caused by ^{153}Sm or ^{155}Sm, because it would have to be accompanied by a stronger peaks at 103.2 keV for ^{153}Sm and 104.3 keV for ^{155}Sm. There are no peaks in the 103 keV range. Another peak that may be caused from a second energy spectrum of 191.44 keV was observed. This peak is sometimes difficult to confirm because of the intensity is one order of magnitude lower than the first peak. The half-life of the radioisotope synthesized in this experiment is estimated to be ~20 hours. We conclude that the first peak is caused from the 77.35 keV gamma emission of ^{197}Pt radioisotope.

We have confirmed this in five tests with different samples. The effect is 100% reproducible for that same sample. We performed the electrolysis with the same sample in deuterium gas followed by hydrogen gas: the ^{197}Pt peak was only observed with deuterium gas. No trace of ^{197}Pt was detected around the sample holder materials. And there is no ^{197}Pt in the Pt plates used to make electric and thermal contact with the sample, even in samples of the metal as large as 100g. The peak intensity appears to depend upon the deuterium gas pressure. We have not yet determined what, if any, effects temperature, electrolysis voltage, current and sample material may have on the intensity of the ^{197}Pt emission.

^{197}Pt nuclei do not exist in nature. They can only be produced artificially by neutron irradiation, as follows:

$$^{197}_{78}\mathrm{Pt} + ^{1}_{0}\mathrm{n} \quad ^{197}_{78}\mathrm{Pt} \rightarrow ^{197}_{79}\mathrm{Au} + \beta- \qquad (1)$$

^{197}Pt changes into ^{197}Au by beta

decay. Other increases were observed in the spectrum, caused by ^{214}Pb and ^{214}Bi. However, we cannot conclude that other nuclear reactions occurred, because these peaks were already detected before the electrolysis. They may have been caused from contamination absorbed when the sample was heated.

There are no reports of chemical reactions affecting nuclear reactions, and no theory that would allow this. However, evidence of cold fusion gives us a hint as to how these reactions

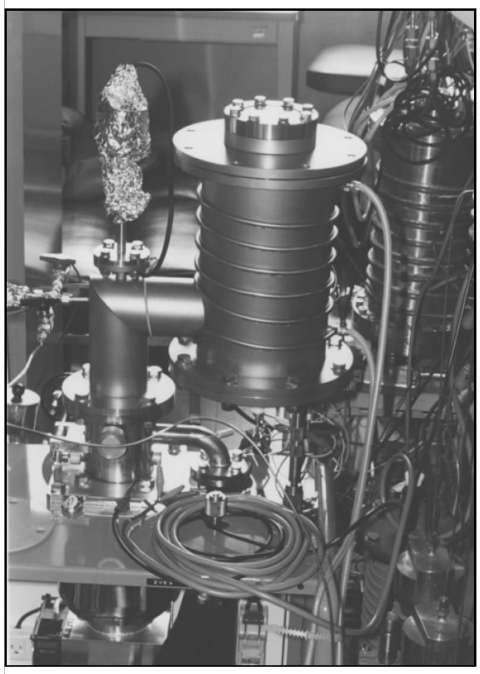

Dr. Mizuno's test cell and vacuum apparatus for producing solid-state cold fusion reactions.

might occur. There are now many reports of cold fusion experiments in which neutron emission, helium isotope evolution, tritium generation, high energetic particle emission and gamma radiation during hydrogen or deuterium absorption by Pd, Ti, Ni and some metal oxides were observed.

The total amount of ^{197}Pt nuclear (n) is calculated from the count number and detector efficiency η as follows:

$$n=2c/\eta \quad (2)$$

η is roughly estimated as being between 10^3 and 10^4. If we assume that all the ^{197}Pt was generated by neutron absorption from one reaction, we can readily estimate the total neutrons from the amount of Pt in the sample and the neutron absorption cross section $\sigma(E)$. The $\sigma(E)$ depends on the neutron energy; it is roughly estimated as 1 barn ($10^{-24}cm^2$) average from thermal to keV range. Total neutrons are then estimated as being between 10^{11} and 10^{12}. However, total neutron emission during the electrolysis is close to or under the background count. It is on the order of $10^2 \sim 10^3$. These values are 10^8 lower than the results require.

Several metals, including Pt, Pd, Ti and Ni and some alloys (LaNi and TiFe) have a strong catalytic effect on hydrogen. They decompose the H_2 molecule to the H atom and ^+H proton. If we assume that the strong catalytic action also somehow causes a nuclear effect between platinum and deuterium, several reactions can be considered:

$$^{196}_{78}Pt + D + D \rightarrow {}^{197}_{78}Pt + {}^{3}_{2}He + 5.46\ MeV \quad (3)$$

$$^{196}_{78}Pt + D + D \rightarrow {}^{196}_{78}Pt + {}^{4}_{2}He + 14.29\ MeV \quad (4)$$

$$^{196}_{78}Pt + D + D \rightarrow {}^{197}_{79}Au + {}^{3}_{1}T + 5.85\ MeV \quad (5)$$

$$^{196}_{78}Pt + D + D \rightarrow {}^{199}_{80}Hg + {}^{1}_{0}n + 8.74\ MeV \quad (6)$$

$$^{196}_{78}Pt + D + D \rightarrow {}^{200}_{80}Hg + 13.9\ MeV \quad (7)$$

$$^{196}_{78}Pt + D + D \rightarrow {}^{199}_{79}Au + {}^{1}_{1}P \quad {}^{199}_{80}Hg + \beta^- + {}^{1}_{1}P \quad (8)$$

$$^{196}_{78}Pt + D \rightarrow {}^{197}_{78}Pt + {}^{1}_{1}P + 2.20\ MeV \quad (9)$$

$$^{196}_{78}Pt + D \rightarrow {}^{198}_{79}Au + {}^{1}_{0}n + 1.82\ MeV \quad (10)$$

$$^{196}_{78}Pt + D \rightarrow {}^{198}_{79}Au + 6.07\ MeV \rightarrow {}^{198}_{80}Hg + \beta^- \quad (11)$$

^{197}Pt nuclei can be formed by reactions (3) and (9). However, we have sometimes observed very weak neutron emission during electrolysis, which opens up the possibilities for other reactions such as (6) and (10).

The same type of reaction may occur in Pd. There are many reports of reactions with Pd in dry and wet systems. The following formulas have been proposed to explain this:

$$^{n}_{46}Pd + D + D \rightarrow {}^{n+1}_{46}Pd + {}^{3}_{2}He + Q \quad (12)$$

$$^{n}_{46}Pd + D + D \rightarrow {}^{n+1}_{46}Ag + {}^{3}_{1}T + Q \quad (13)$$

$$^{n}_{46}Pd + D + D \rightarrow {}^{n+1}_{47}Ag + {}^{3}_{2}He + Q \quad (14)$$

$$^{n+4}_{47}Cd + Q \quad (15)$$

$$^{n}_{46}Pd + D \rightarrow {}^{n+1}_{46}Pd + {}^{1}_{1}P + Q \quad (16)$$

$$^{n}_{46}Pd + D \rightarrow {}^{n+1}_{47}Ag + {}^{1}_{0}n + Q \quad (17)$$

$$^{n}_{46}Pd + D \rightarrow {}^{n+2}_{47}Ag + Q \quad (18)$$

However, Q values are changed with the isotopes of Pd; the value is on the order of few MeV in almost all cases. If we take ^{106}Pd, ^{108}Pd and ^{110}Pd for formula (17), we obtain 1.78, 2.21 and 2.62MeV respectively: 99.9% of the energy goes into neutrons. The ^3He from reaction (12) and ^3T from reaction (13) have several MeV of Energy. They bombard the other deuterium atoms and induce the d - d nuclear fusion reaction; ^4He, protons and neutrons are generated. The neutron energy is broadened from 14 to 17 MeV in this case. These mechanisms seem to give a solution to the questions of reaction products in Cold Fusion.

We would like to thank H. Tazima, T. Setoguchi, Y. Kasiwagi, T. Shigemitu, and S. Sawada for valuable discussions. We are grateful to M. Araki and J. Rothwell for strong support in our study. This work was supported in part by the NHE fund of the Institute for Applied Energy of NEDO.

References

[1] H. Iwahara, T. Esaka, H. Uchida and N. Meda, Solid State Ionics, 3/4, 359 (1981).
[2] H. Iwahara, H. Uchida, K. Kondo and K. Ogaki, J. Electrochem. Soc., 135, 529 (1988)
[3] T. Yajima, K. Koide, K. Yamamoto and H. Iwahara, Kenki Kagaku, 58, 547 (1990)

Figure 1. Experimental arrangement. The sample was heated to a constant temperature with an electric heater covered with stainless steel. Electric power was supplied from a stabilized power source. The electric fields (proton driving voltage: EPD) was supplied from a function generator via a power amplifier. Pressure was measured to a capacitance manometer with 0.1 Torr accuracy. Temperature was recorded with 0.1°C accuracy by three thermocouples that were coated with thin stainless steel covers. All parameters: EPD (voltage and current), heater power, sample temperature, gas pres-

New Energy Times Archive

sure and cylinder wall temperature were recorded in a data logger computer floppy diskette. The reaction cell is a stainless steel cylinder 40 cm long, 20 cm in diameter, with walls 5 mm thick.

Figure 2. Reactor cylinder. The upper assembly consists of the proton conductor sample, held on both sides with 0.3 mm thick Pt plates, which are in turn sandwiched between 0.3 mm thick Ni plates. Three thermocouples covered with thin stainless steel are pushed directly on to the upper part of the upper Pt plate. The Pt plates make electrical contact with the ceramic sample and thermal contact with the thermocouples. This entire assembly is fixed to the lower assembly which is a heater. It consists of spiral resistance heating wire covered with ceramic insulation. EPD power was supplied through copper wires 1.6 mm in diameter. The sample holder is surrounded by Ni plate reflectors. The holder is fixed with four supports made of 6 mm diameter stainless steel, covered by alumina insulators. Four nuts attach under the support rods, pressing the Pt plate, alumina spacer, and proton conductor sample tightly against the thermocouple. The components are welded to the cell cover flange that has several electric connectors. The connectors introduce thermocouple, electric power lines for the heater, and electric field supply for the sample.

Figure 3. Gamma ray spectrum before the electrolysis (B) and data are accumulated from 0 to 24 hours (A1), for 0 to 48 hours (A2) after electrolysis. (A2-A1) is subtraction from A2 by A1. Gamma ray spectrums were obtained by a 4-inch Ge (Li) detector in 4π shield container of 20 cm and 5 mm thickness of Pb outer and Cu inner shields. A multi-channel analyzer of 8000 channels was coincided to 0 to 4000 keV of energy range. A gaussian window was fit to the calculation for the spectrum analysis.

THIS HOLIDAY SEASON

GIVE THE MOST IMPORTANT GIFT TO A FRIEND....
A Subscription to
Infinite Energy Magazine.

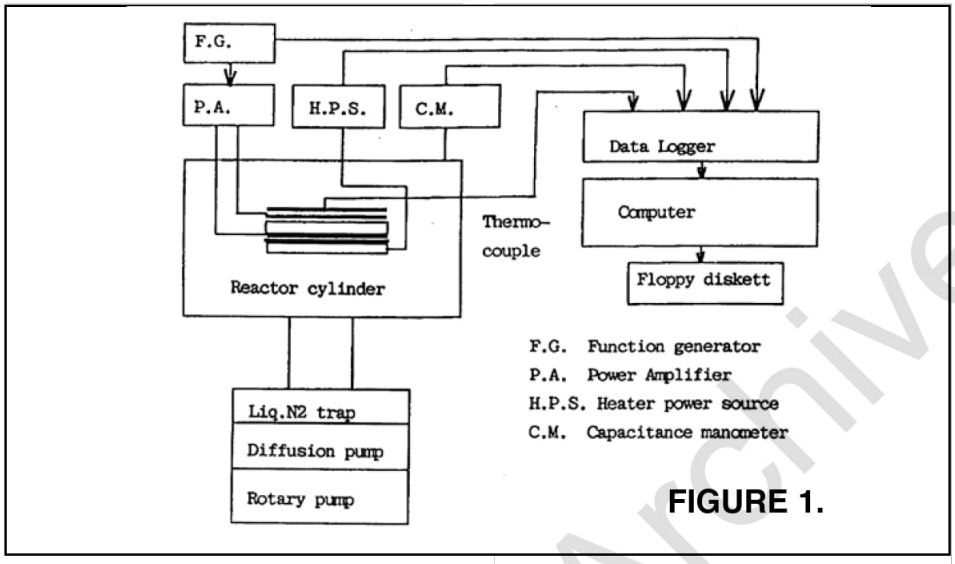

FIGURE 1.

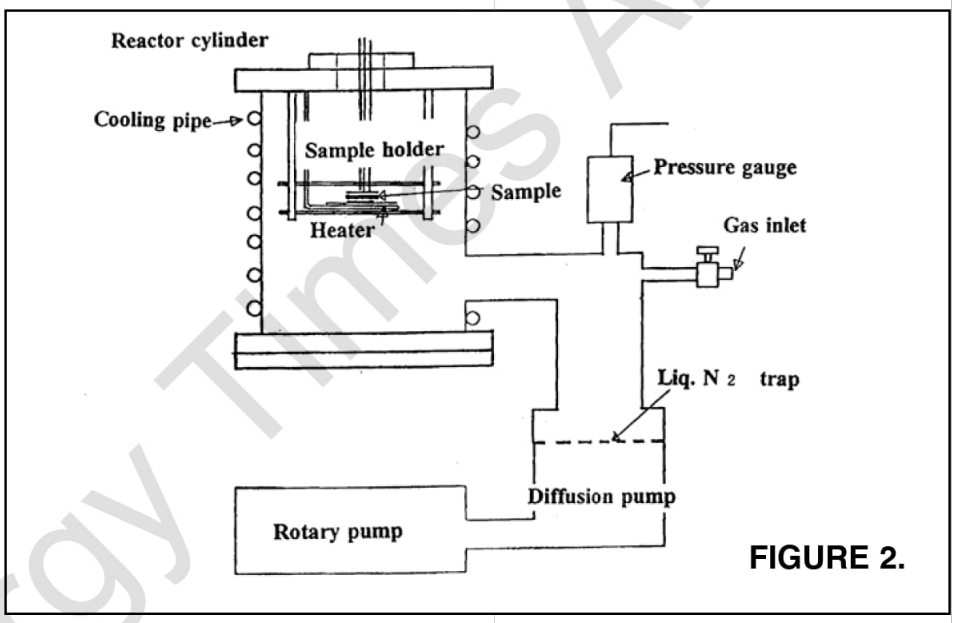

FIGURE 2.

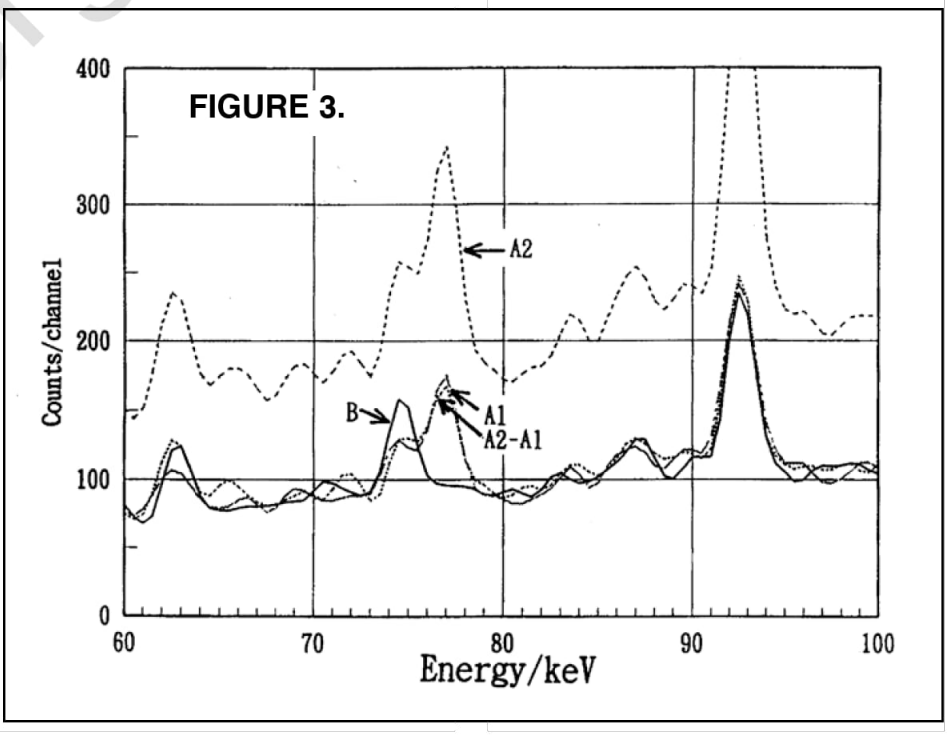

FIGURE 3.

New Energy Times Archive

BRIEFS

by Jed Rothwell and Gene Mallove

• **Funding and corporate support for Cold Fusion (CF) research has improved markedly in the past few months,** particularly in Italy and Japan. The Italian automaker Fiat, which has been involved in this research for a long time, recently invited 40 top scientists from around the world to a conference on CF. One focus of discussion is the Piantelli gas-loaded nickel CF experiments, which are funded by Fiat. The meeting ended with a major press conference during which Fiat reconfirmed their support for this research, as they did last year. Many Italian national university labs are doing impressive experiments. I have no detailed information about the press conference or the Fiat work because I do not speak Italian.

• A few years ago the **Japanese Ministry of International Trade and Industry** announced the formation of a CF research consortium of corporations and universities, in the New Hydrogen Energy Project (NHEP). There were originally 10 corporate participants, including Toyota, Mitsubishi Heavy Industry, Toshiba and other leading Japanese corporations. Funding was only $30 million over four years. **There are now 20 corporations participating and funding was recently increased to $100 million over four years.** While the NHEP program has replicated some of the leading experiments, and it has verified the excess heat, we have not seen any astounding or impressive results from it yet. Judging by informal reports and by the patents granted to Japanese corporations independently of the program, we think that the bulk of impressive work is being done outside the NHEP behind closed doors.

• The original Pons-Fleischmann patent has finally been granted in Europe. Many other CF patents have been granted in Europe and Japan, but in the U.S. as far as can be known, they have all been bottled up except the three granted to Patterson (CETI). Until patents are issued, funding in the U.S. will be stymied. There is still a strong bias against this research in the U.S. scientific establishment, and entrenched opposition at the Department of Energy, so no mainstream funding is available. In spite of these roadblocks and problems, scattered but impressive research is still being conducted with private funding. We are particularly impressed with the light water nickel cells from Clean Energy Technology Inc (CETI). These have been independently tested in five labs, and independently replicated from scratch by Miley's group at the University of Illinois. At a major biannual hot fusion physics conference last month (SOFE '95), the U. of Illinois and CETI teamed up to demonstrate a cell with 0.06 watts input and 5 watts output. The cell turns on reliably in only 20 minutes, and it runs all day, producing thousands of times more energy than chemical storage would allow. A similar cell ran recently with 1 watt input and 21 watts output for 7 weeks uninterrupted. We do not think that the Japanese NHEP has achieved any results as good as this, in spite of its funding. CETI's research is amply funded by private sources.

• **HydroCatalysis Power Corporation of Lancaster, PA continues to forge ahead** with its technological developments and scientific investigations. In the November 1995 issue of *Fusion Technology*, Vol.28, pp.1697-1719, a lengthy article by Dr. Randell L. Mills and William R. Good of HPC provides what the authors say is further convincing evidence for the existence of hydrinos. The paper's abstract:

"Report is made of the detection of atomic hydrogen in fractional quantum energy levels below the traditional 'ground' state —hydrinos— X-ray photoelectron spectroscopy and by a reinterpretation of soft X-ray emissions from the interstellar medium. Hydrino formation occurs with the release of energy on nickel cathodes during the electrolysis of aqueous potassium carbonate. The detection of a new molecular species—the diatomic hydrino molecule — by high resolution mass spectroscopy — is also reported."

"I have not the smallest molecule of faith in aerial navigation other than ballooning."
— Lord Kelvin, circa 1870

Proceedings of the Conference on Low-Energy Transmutation are available for $75.00 per copy from:
Fusion Information Center, Inc.
P.O. Box 58639
Salt Lake City, UT 84158
Fax: 801-583-2963
Phone: 801-583-6232

Subscibe Now To...

ELECTRIFYING TIMES

International coverage of:
- **Electric Racing Events**
- **New Propulsion Technology**
- **Over Unity-Antigravity**
- **Latest Battery Technology**
- **Company Profiles**

3 Issues per year for only $10
-Affordable Advertising-
63600 Deschutes Road
Bend, OR 97701
Phone: 503-388-1908
Fax: 360-693-4408

Theory and Experiments

ANTIGRAVITY ON A DISK

Contains over 1 megabyte of information in 12 chapters, 20 illustrations, one "sound bite," and two animations

Only $14.95

The information is presented in a manner that is accessible to the novice, yet is thorough enough to please the most advanced investigator.

- Discover how Edward P. Tryon's theory about the genesis of the universe may be used to produce new energy.
- Learn about the far-reaching ideas of Harold E. Puthoff.
- See and hear Frank J. Stenger's ball lightning machine.
- Explore Jan Pajak's magnocraft.
- View a plasma ball in a microwave cavity.
- Discover the error in the "Copenhagen interpretation" of quantum mechanics.

Requires Windows and a 386 or higher processor (Copyright 1995)
The author, Frank Znidarsic, has a B.S. in Electrical Engineering from the Unviersity of Pittsburgh, has an Associate in Science from Saint Francis College, and is a registered professional engineer in the state of Pennsylvania.

To order— send $14.95 payment to:
Cold Fusion Technology, P.O. Box 2816
Concord, NH 03302-2816

New Energy Times Archive

Exclusive Video Tape Coverage of the.....

Second Annual Conference On Cold Fusion—ICCF2

Held at the Centro Di Cultura Scientfica "Alessandro Volta"
Villa Olmo, Como, Italy ——June 29 - July 4,1991

Two VHS Tape Set, Four Hours, NTSC Format

Tape One—Presentations of Scientific Papers

• Dr. Robert T. Bush, CalPoly, Pamona, discusses his experiments with thin-films of palladium which produced excess power at a peak rate of 3000 watts per cc and produced 15 Megajoules (4 kwh) during nearly six weeks of continuous operation.
• Dr. V.A. Tsarev, P.N. Lebedev Physical Institute, Moscow, reviews dozens of successful Russian experiments.
• Dr. John Bockris, Texas A & M, shows calculations of the effects of high fugacities (internal pressures) on the metal lattice and also describes his latest electrochemical experiments, which produced over 30 Megajoules of excess heat per mole of palladium.

Tape Two—Two, One-Hour Roundtable Discussions

• "Similarities and Differences in Cold Fusion Experiments," chaired by Dr. David Worledge of the Electric Power Research Institute. Panelists include Drs. Stanley Pons, Hideo Ikegami, Melvin Miles, and X.Z. Li.
• "Cold Fusion 1992: Where Do We Stand—Where Do We Go." chaired by Dr. Martin Fleischmann. Panelists include Drs. Vladimir Tsarev, Fritz Will, Michael McKubre, Giuliano Preparata, Robert Huggins.

The results presented at this conference were historic. They dispelled any remaining doubts about the reality of Cold Fusion and the convincing evidence of its nuclear nature. The conference should have been front-page news across the globe. However, the popular media decided to not report the events at this conference. These tapes are the only video record of the event.

These video tapes, which were edited and originally sold by Nova Reources Group, Inc., are now available exclusively through Cold Fusion Technology. To order your set of ICCF2 Tapes, send check or money order for $165.00 (U.S. and Canada) or $185 (for other foreign) (in US funds) to:

Cold Fusion Technology, P.O. Box 2816 Concord, New Hampshire 03302-2816
Or, provide credit card information—number and expiration date— (Master Card, VISA, AMEX) FAX: 603-224-5975

Praise for Eugene Mallove's *The Quickening Universe: Cosmic Evolution and Human Destiny*

"A wonderful philosophical and reflective essay on the nature of the universe as informed by modern science. It is a fine example of how scientific discovery helps shape one's world view in a rational yet compassionate manner."
—the late Heinz Pagels, Ph.D.
Physicist and former executive director of the New York Academy of Sciences and author of *Perfect Symmetry* and *The Cosmic Code*

"A very fine book. So engaging I could not resist speed-reading several sections, pending time to study the contents in greater depth.
I endorse all its general conclusions."
—Dr. Paul Davies, physicist and author of *God and the New Physics*, *The Accidental Universe*, *Superforce*, *The Edge of Infinity* etc., etc.

"The book is so excellent and complete in itself that I am hard put to suggest anything that might improve it."
—Guy Murchie, author of *Song of the Sky*, *Music of the Spheres*, and *The Seven Mysteries of Life*

"A journey through space and time—well written and stimulating. What is our role in this universe? Are there other civilizations out there?"
—Dr. Gerald Hawkins, astronomer and author of *Stonehenge Decoded*

"Dr. Mallove unfolds so many [of the] scientific theories with a vividness that will make them come alive for readers."
—Renee Weber, professor of philosophy, Rutgers University and author of *Dialogues with Scientists and Sages: The Search for Unity*

QUESTION:

WHAT WAS GENE MALLOVE WRITING ABOUT BEFORE COLD FUSION?

ANSWER:

EVERYTHING!

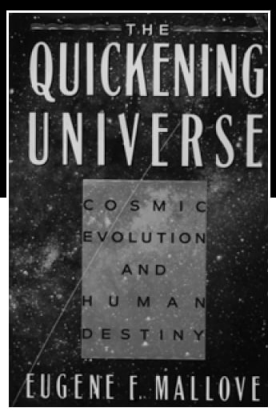

1987, St. Martin's Press, hard cover, 268 pages, illustrated by the author.

READ *THE QUICKENING UNIVERSE*
Order your inscribed copy today:
Send **$19.95** (U.S. and Canada);
($24.95, Other foreign , check or credit card. (Fax: 603-224-5975)
Cold Fusion Technology
P.O. Box 2816
Concord, NH 03302-2816

New Energy Times Archive

Can Cold Fusion be Catalyzed by Fractionally-Charged Ions that have Evaded FC Particle Searchers

Joseph L. McKibben
Los Alamos National Laboratory (Retired in 1980)

EDITOR's NOTE: *It is a great honor for* Infinite Energy *to bring Dr. McKibben's startling theory and experimental analysis to our readers. This theory is based on observations that are fully testable. Moreover, Dr. McKibben provides details on how such observations—already performed in the past and unconnected with cold fusion —can be re-examined experimentally. We expect that some of our readers will pursue this work.*

Dr. Joseph McKibben received his Ph.D. in physics from the University of Wisconsin and worked on the Manhattan project. He operated the countdown timer for the first atomic bomb test on July 16, 1945. He retired from Los Alamos National Laboratory in 1980 and today lives in Los Alamos, New Mexico.

Dr. Joseph McKibben at home in Los Alamos, NM

I. Introduction

Various cold-fusion apparatus functioning today seem explainable using three fundamental but unrecognized particles that the author has been studying intermittently for 14 years. He was attracted to the data because of some heretical views he holds about why particles exist. Particle physicists feel no need to consider these particles since the experimental evidence is apparently not nearly rigorous enough to force them to alter their manner of thinking about particles. Experimental physicists have not followed-up, because the people who did the experiment abandoned it and experimentalists are influenced by the attitude of theoretical physicists.

The author is an experimental physicist and an accelerator-builder, but being retired since 1980 he has confined his efforts to trying to analyze the data; he would like to repeat the experiment himself but now at 83 is too old and does not the financial resources to hire people to repeat the experiment.

The order of this paper: (1) describe the particles; (2) describe some of the experiments that led to this analysis; (3) show how one of these particles joined to a helium nucleus can catalyze cold fusion; and (4) show how to verify the experimental data and how to analyze water for the two different particles that are active in catalyzing cold fusion.

In 1964 Gell-Mann[1] and Zweig[2] independently published papers postulating that nucleons are composed of three quarks. The quark with electric charge +2e/3 was called the *up quark* and the quark with charge -e/3 was called the *down quark*. This set off a revolution in particle physics. A minor aspect of this revolution has been an intensive search for **fractionally-charged (hereafter, "FC")** particles outside of nucleons and mesons. The results of the searches were universally judged to be negative with the possible exception of an experiment done at Stanford University by Hebard, LaRue and Phillips working in sequence under the direction of the late William Fairbank. A long paper entitled "Quark Experiments at Accelerators and in Cosmic Rays" was published in 1985 by L. Lyons[3] and a paper entitled "Searches for Fractional Electric Charge in Terrestrial Materials" was published in 1989 by P. F. Smith[4]. In these papers and in the numerous papers cited in their references, one can get a comprehensive picture of the very extensive searches that were made for these FC particles. Searching, using high-energy ions accelerated at CERN, has been continued by Cecchini et al and was reported in 1993, so the inability to find free quarks by experiments using high-energy accelerators or cosmic rays has been well demonstrated and theorists have now developed reasons that explain why it is impossible to knock a quark out of a nucleon or a meson. These conclusions are not being disputed in this paper, since the particles observed do not appear to be quarks but rather *constituents* of quarks that may

New Energy Times Archive

Bang.

This work has bought out two properties of quarks: (1) FC just mentioned and (2) *color charge* **(CC)**. The cold fusion reader may find helpful the discussion in Michael Riordan's book, *The Hunting of the Quark*. Fritszch and Gell-Mann intrduced the term *color* on the up, down and strange quarks to explain the decay rate of the pion—without them they were a factor of 3^2 too low. The names of the colors that eventually came into use were: red, green and blue, because their sum was colorless.

No let us introduce another way of looking at CC. An electron and a positron can produce an electric field. They both oscillate at a frequency $E=h\gamma$, but they must maintain the 180° space-time phase—in that manner they resemble a single-phase power line. But electricians employ three-phase power lines and to keep the lines identified they usually mark them with colored tape. Now quarks must maintain a three-phase space-time relationship to each other, so theorists have labeled them with color also .

The reader may well believe that the author is writing science fiction! However, the facts seem to be stranger than a science fiction story—at least much stranger than this author could possibly have conceived.

II. The FC Particles and Some of their Interactions

Ordinarily, an author would describe the experiment that was done and then describe the results that the experimentalists drew from it. In this case, however, before discussing the interesting but abandoned experiment done in 1967 at the Argonne National Laboratory by Stevens, Schiffer, and Chupka[7] **(hereafter, "SSC" refers to this experiment)**, the particles that come out of my analysis of their data will be described first. I do this because the reader will find getting the analysis out of the data difficult. The author has spent a great deal of time on the analysis of all six of their chart recordings, which were obtained early in 1982 from Charles Stevens, to find what I believe is the correct solution. Since my conclusions are based on data of disputable quality, the eventual repetition of the SSC experiment is important. However, since data appears to fit into a consistent pattern, the author actually believes better data will basically provide much more accurate numbers but will not refute the general pattern into which they seem to fit. Still, there are details that cannot be settled until better data is obtained, nor will particle physicists accept the present data as being valid—nor should they.

The largest fundamental particle, herein called *subquark*, has an electric charge of only +e/6 and a mass of ≈1.15 amu (atomic mass units). Subquarks appear to have three strong CCs and to bind strongly to nuclei. The second fundamental particle, herein called *+ hemitron*, has a charge of +e/2 and a mass ≈ 0.15 of a nucleon. It appears to have color charge too, but smaller in value and with an anticolor sign relative to its complimentary subquark. So, for example, a red subquark can combine inside a nucleon or meson with an anti-red + hemiton and form a red up quark. The data suggest that a third fundamental particle exists with a charge of -e/2 and a mass in the vicinity of 0.4 of a nucleon. Unfortunately, the experimental data that suggests its existence is not nearly as good as for the other two particles. A -e/2 charged particle of some type must combine with a subquark inside a nucleon to form the down quark so the *- hemitron* must exist by implication.

There was a lot of theoretical speculation in the 1970s and early 1980s about the existence of component particles which were then called "preons" or "rishons." This speculation has been summarized in a paper by L. Lyons,[8] published in 1983, entitled "An Introduction to the Possible Substructure of Quarks and Leptons." The preon concept that had the greatest similarity to the particles that appeared to have been observed was conceived by theoretical physicists Fritzsch and Mandelbaum[9]—their first paper was published in 1981. They speculated about the existence of four basic particles that they hoped were the simple underlying particles of nature. When Gell-Mann heard about their speculated particles he suggested that they be called *haplons* since the Greek word for simple is *haplos*. While they proposed four basic FC particles, the data discussed in this paper only supports the existence of three such particles and which only appear to be the component particles of quarks. Their fourth particle was needed to form electrons and neutrinos, but evidence for such a particle was not observed in the data. The author did not become aware of these papers until 1989, but he had became aware of the three FC preon-like particles several years earlier. Their ideas do seem to give important theoretical support for the particles that appear to have been observed.

Many of the FC particles are contained in neutral "atoms"; however, the nuclei of these "atoms" have a complicated structure. Apparently, the first step in the formation of these "atoms" was for subquarks to become bound to nuclei and they appear to be bound with 15 MeV energy for each nucleon in it. Then subquarks having the three different CC brought the three nuclei that they were attached to close together. These nuclei are identical in mass and charge and no exceptions to this rule have been observed in the data. The net nuclear charge of these three nuclei with their subquarks is +(3Z+0.5)e. However, their CC attracts three +hemitrons with complimentary CC, so the net electric charge of this complicated nucleus is +(3Z+2)e and the net CC is zero. To see how this works out, let us consider the very important example of three alpha particles with their three bound subquarks and three nearby +hemitrons. This complicated "nucleus" requires 8 electrons to neutralize it and so forms an "atom" that chemically resembles oxygen. It is this "atom" that appears to be responsible for cold fusion, but breakup into its three Sq-He components by nuclear collisions or by high temperature created by cavitation jets, is required. On the other hand, if the three nuclei are ^{9}Be instead of ^{4}He, the "atom" formed chemically resembles silicon. If one +hemitron is somehow not present in this "silicon atom," a -e/2 ion is formed. Ions with charge of -e/2 of "boron," "oxygen," "sodium," "silicon" and "calcium" were observed. First, I suspected the +hemitrons were removed from the "atoms" by cosmic rays, but now I suspect there simply are not enough +hemitrons in existence to neutralize all the "atoms." We are fortunate that this seems to be so.

On the other hand, the data indicate that a pair of the three nuclei in a triad "atom" may fuse together, provided the number of their neutrons exceed the number of their

COLD FUSION TIMES

The Journal of the Scientific Aspects of Loading Isotopic Fuels Into Materials

Published Quarterly

Publisher and Editor
Dr. Mitchell Swartz

Annual subscription rate is $120.00. Single issues are $40.00. There is an extra postage and handling charge of $5.00 per order outside of the United States.

P.O. Box 81135
Wellesley Hills, MA USA
02181

New Energy Times Archive

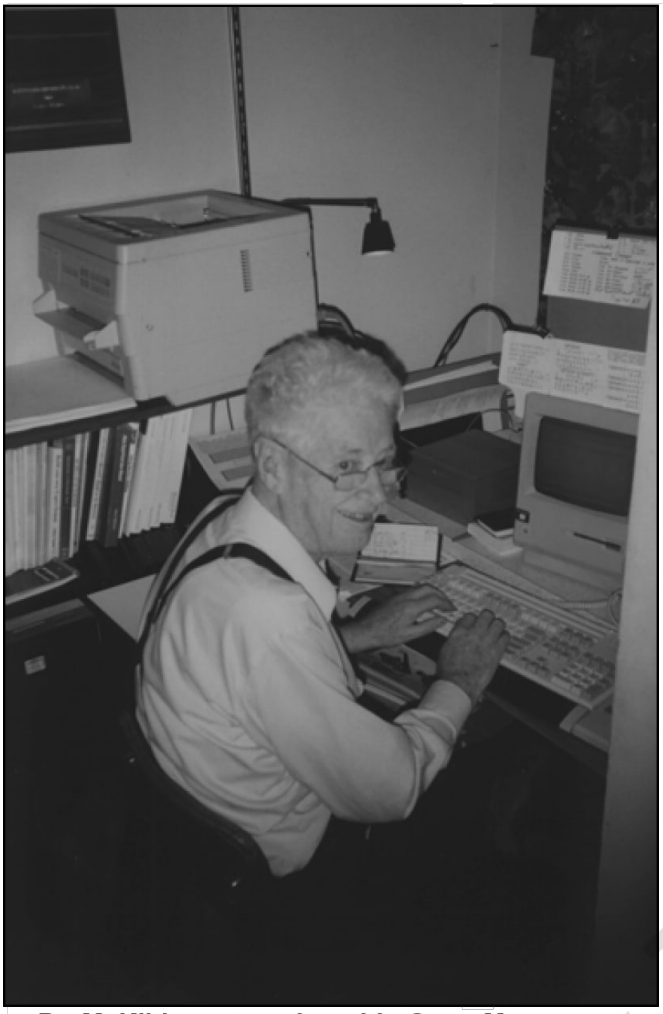

Dr. McKibben at work on his Opus Magnum

protons. This is best demonstrated in the data for "sodium" ions, because ions based on a triad of ^{6}Li nuclei were observed with fair intensity while ions based on a triad of ^{7}Li nuclei were not observed at all. Apparently two of three ^{7}Li nuclei with their subquarks can combine, with the emission of two neutrons which carry away the energy of combination. So a ^{12}C nucleus is formed with two subquarks strongly bound to it and two +hemitrons nearby —the basic charge of this ion is +e/3. This nucleus may form a negative ion with the electron that gives it charge -2e/3 being bound by 3.3 eV according to Lackner and Zweig[10]. A -2e/3 ion was observed at 847 gauss in Figs. 2 & 3 and its mass per unit charge suggests that a pair of +hemitrons were actually present on it. Several other examples will be noted; however, in all the other cases fusion has not completely eliminated the presence of a neutron-rich nuclear triad as has occurred in the case of ^{7}Li.

Fused quartz is an especially good material upon which to search for FC ions. Fused quartz has the highest rate of diffusion of all the non-porous glasses for most ions, helium atoms, etc., so the FC ions diffuse more rapidly from it. Moreover, a sizable electric field can be placed across it at high temperature and this greatly speeds up the rate that the ions migrate to its surface. But there is also another reason why fused quartz is a good material in which to search for fractionally-charged ions. Three ^{9}Be nuclei with attached subquarks, along with three accompanying +hemitrons form "silicon," so quartz originally should have had a high abundance of these "atoms." However, over the billions of years these "atoms" have existed, many pairs of ^{9}Be nuclei with their subquarks have fused together forming ^{16}O ion with two subquarks or abbreviated 2Sq-^{16}O. Its strong CC gives it some exotic properties that will be discussed below.

III. Information obtained chiefly by Stevens, Schiffer, and Chupka.

John Schiffer[11] initiated an experimental program while at the Argonne National Laboratory, which searched for free quarks soon after their existence was proposed. He and his associates Stevens and Chupka extended their program to search in several materials—the latest used in the these early searches was ferromanganese nodules from the ocean. His program culminated in a remarkable experiment (as the author sees it) in 1967 in which a crossed-field analyzer was used to sort out the ions by their masses per-unit-charge and numerous unknown peaks were found. Unfortunately, the presence of the numerous peaks that they could not identify did not appear to be credible to Schiffer et al and the experiment was abandoned. Also contributing to its abandonment was the fact that they could not reproduce the results when their nodule sample was changed. While the experiment was done in 1967, what little information that was published on it was in 1976[7] on one page of a paper that described their search for FC particles in rocks from the Moon.

In 1967 Stevens, Schiffer and Chupka, **(hereafter SSC)**, were attempting to find FC particles in ferromanganese nodules from the ocean. These were powdered and placed in a newly-constructed fused-quartz sample holder. A drawing of their sample holder, which was operated several hours at 800° C to collect the FC ions, is displayed in SSC's Fig. 1. They had a clever device in the long neck of the sample holder to minimize the presence of integer-charged ions on the filament. At its center was a rod at ground potential and the inside surface of the long neck was lined with gold foil and placed at a potential of -600 volts. Argon at atmospheric pressure flowed into the sample holder from the opposite end and out between the annular electrodes. This did two things: (1) it collected neutral atoms and molecules that had evaporated from the electrodes; and (2) it caused the migration along the neck of the sample holder of the FC ions as they traveled back and forth in the gas between the electrodes. A cold platinum filament at +300 V collected the ions that came out of the open annular area in the neck.

The filament was then taken and installed in front of their newly-constructed crossed-field analyzer, also well known as a *Wien filter*. A drawing which purported to show this arrangement was their Fig. 2, but it was an old drawing that only showed a permanent magnet where the Wien filter had been placed. The ions from their platinum filament were accelerated through 15 kV potential and focused so they passed through the one-cm-square-channel of the Wien filter. Those ions that made it through the Wien filter struck an aluminum plate set at an angle, and the number of electrons that were released by the ions colliding were amplified by a 20-stage electron multiplier. The pulses of current were sent into a count-rate meter and its output was plotted on the Y-axis of a chart recorder. The X-axis was proportional to the current through the ramped-up current in the electromagnet; unfortunately, a reliable Hall-effect gauss meter did not exist in 1967.

They ramped up the magnetic field six times and each time made recordings similar to the reproduction displayed in their published Fig. 3; however, the first peak labeled as 0.6 amu was plotted at a very much lower value. Since at that time 0.6 amu seemed to be a reasonable value for the mass of a quark, the author contacted Charles Stevens. After some discussion, he informed me of the five other chart recordings that had been taken and presented me copies of these. These were not alike, because four different filament temperatures were used, since the molecular ions tended to come off at lower temperatures and chemically active atomic

New Energy Times Archive

The symbol ("Si"(^{9}Be)) represents the -e/2 ion of silicon whose nucleus contains 3 (^{9}Be-subquark) units and 2 + hemitrons. The "atom" has 3 + hemitrons. The three subquarks have a different color charge.
The symbol (Exotic^{16}O(^{9} Be))represents 2 (^{9}Be-subquark) units combining into single nuclear ion with FC +e/3 & with 2 nearby + hemitrons.

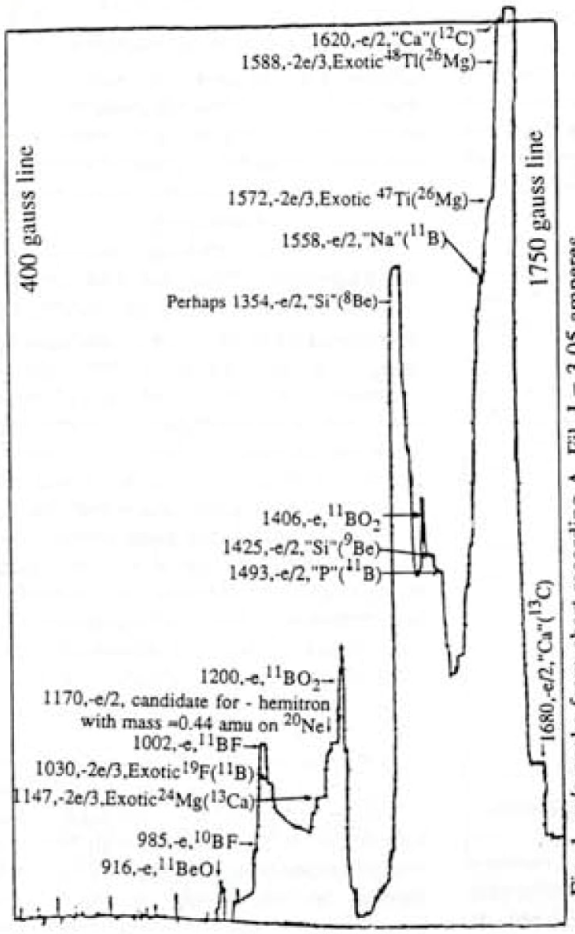

Fig. 1. m/q peaks from chart recording A. Fil. I = 3.05 amperes.

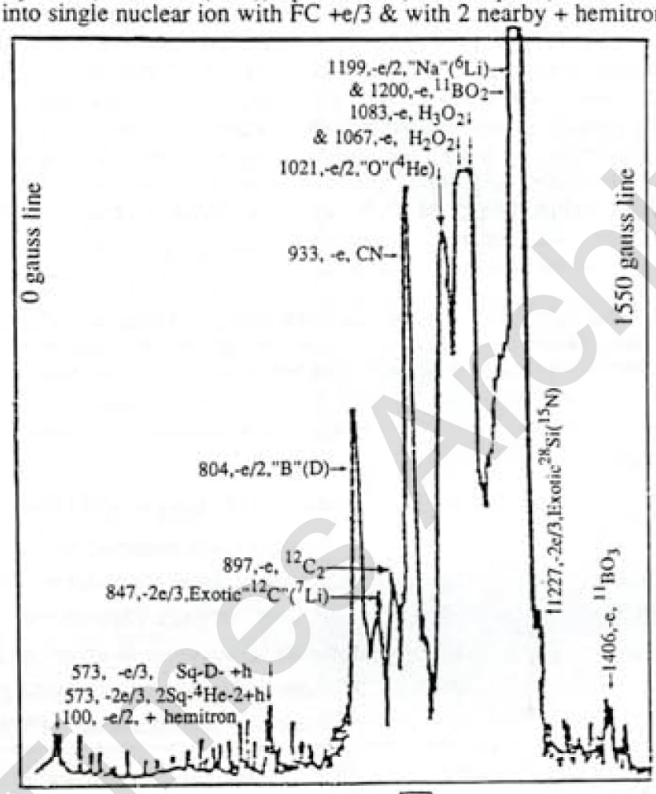

Fig. 2. m/q peaks from chart recording B. Fil. I = 3.2 amperes. CCS in their paper stated this filament temperature to be 1000° C.

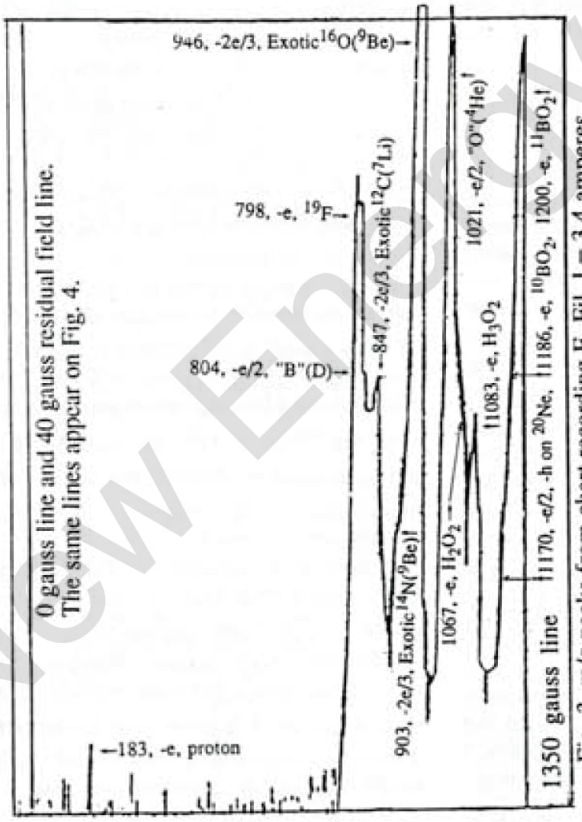

Fig. 3. m/q peaks from chart recording E. Fil. I = 3.4 amperes.

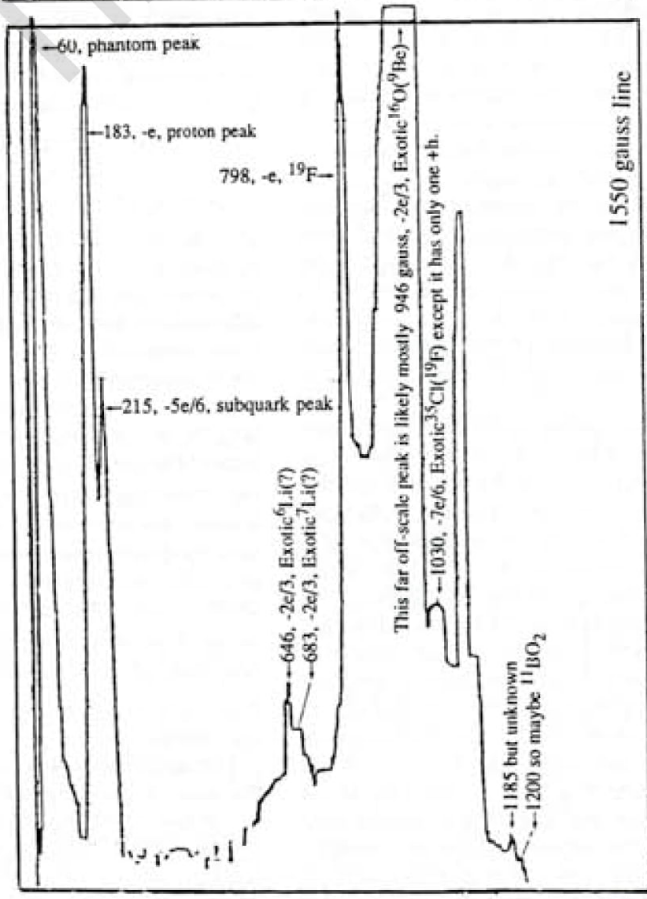

Fig. 4. m/q peaks from chart recording F. Fil. I = 3.8 amperes.

New Energy Times Archive

ions tended to come off at higher temperatures. Reproductions of these chart recordings are displayed in Figs. 1-4 and the filament currents used are noted on them.

Nearly fifty different mass per-unit-charge values appear on at least one of the charts. There were a lot of peaks that SSC could not explain and they expressed concern that many of these peaks were produced by malfunction of the Wien filter. Actually they had made a good choice for their analyzer, since it was a velocity selector and the molecular ions that were broken apart had components that were still traveling at the same velocity. However, having a larger charge-to-mass ratio improved the resolution, and that supplied useful information in interpreting the peaks. Stevens, who built the analyzer, had been very careful that the vacuum in the accelerating region was good. Unfortunately, the plates of the Wien filter were only one centimeter apart and were supported by insulators one centimeter apart, so the pumping speed through its fifty-cm length was poor, so some evidence of breakup of molecular ions was observed, especially on chart recordings C and D.

SSC expressed concern in their paper that many of the peaks did not show up on the second run. It is the author's opinion that if they had changed their sample holder rather than the ferromanganese nodules they would have found their peaks again. Fused quartz has the highest diffusion rate for ions and it appears they had inadvertently applied about 600 volt across the tubing, which greatly speeded up the migration of the FC ions out of it.

Since they needed the instantaneous magnetic field value for plotting their ion masses and they had no space for gauss meters then available, they were restricted to using the current through their electromagnet. So they set the magnetic field shifts between the vertical lines that were one half-inch apart on their chart paper to be 250 gauss— using a NMR gauss meter before they installed their chamber. Unfortunately, they somehow forgot to check out the residual field characteristics and also did not include an estimation of it on the magnetic field scale shown in their Fig. 3. Fortunately, a phantom electron beam peak appeared to be present on recording F and Fig. 4 is a reproduction of this recording. It reminded the author of a phantom electron beam he had often observed passing through the spin-precessing Wien filter of the polarized H^- ion source that he was responsible for building and using in the period 1965-1980. Fortunately, in 1982 he was still able to make an experimental study on the electric and magnetic fields associated with this phantom beam. It showed up when the source was delivering a H^- beam rather than a D^- beam—apparently it was created by electrons sputtered loose from the negative electrode by the H^- beam that struck it. Since electrons travel in a cycloidal path in a Wien filter, the magnetic field could be adjusted so they struck the positive electrode tangentially. It is only when they struck tangentially that a sufficient number of positive ions were released for the phantom beam to propagate. After having proven the nature of the phantom beam on the Wien filter of the polarized H^- ion source, the parameters on the Wien filter built by Stevens were obtained from him and calculation proved that their phantom beam would show up in their filter at 60 gauss if an H^- beam was present. It was now clear which of the two peaks was due to H^- ions and that the residual field was ≈40 gauss.

The author was then able to determine the mass scale fairly accurately, since the ion peaks of normal substances present on the various recordings included negative ions of $^{1}H^-$, $^{19}F^-$, $^{35}Cl^-$, $^{37}Cl^-$, BF^-, BO_2^-, BO_3^-, C_2^-, CN^-, $H_3O_2^-$, $H_2O_2^-$, H_2O^-, PO^-. The three isotopes of Ge^- appeared as tiny peaks on chart F but at a too large value of the magnetic field to be displayed on Fig. 4. The relationship between the field H in gauss of a peak and its mass m in amu divided by its charge in q units of e is $H = 183(m/q)^{1/2}$.

A prominent unknown mass-per-unit charge peak appeared at 215 gauss and a larger peak appeared at 183 gauss and was identified to be H^-. A small-mass ion peak was observed at 100 gauss. Establishing that the ion of the 215 gauss peak had positive charge of +e/6, or a negative ion charge of -5e/6, and hence a mass of 1.15 amu took a lot of trial and error fitting. This effort suggested that the ion at 100 gauss had a basic charge +e/2, or an observed charge of -e/2, and so its mass is 0.15 amu. Another crucial problem was determining how the binding energy of the subquarks to nuclei varied with their total mass. This was determined to be close to 15 MeV per nucleon in the nucleus.

Information on the peaks associated with ions of mock "atoms" is presented in Table 1. The mock "atoms" were not observed as neutral atoms but were inferred from the mass-per-unit-charge of the -e/2 ions that existed as the result of one of the +hemitrons not being present. Unfortunately, two of the three low-mass peaks are hidden by peaks produced by negative ions of normal matter. One peak due to the mock-boron ion at 804 gauss is rather close to the 798 gauss peak of $^{19}F^-$ so it took some judgment to separate these peaks. The another conflict is the mock-sodium ion peak at 1199 gauss and the prominent molecular ion $^{11}BO_2^-$ that is present at 1200 gauss.

There is a sizable peak at 1354 gauss on Fig. 1 where mock "boron" based on a triad of ^{8}Be nuclei with subquarks and two +hemitrons might appear; however, the mass resolution is not good enough to be sure it is ^{8}Be. It is clear the the binding of the subquarks on ^{8}Be nuclei would keep them stable but were they formed? So ^{8}Be is not listed in Table 1.

There is a sizable peak at 1354 gauss on Fig. 1 where mock boron based on a triad of ^{8}Be nuclei with subquarks and two +hemitrons might appear; however, the mass resolution is not good enough to be sure it is ^{8}Be. It is clear that the binding energy of subquarks on ^{8}Be nuclei would keep them stable, but were they formed? So ^{8}Be is not listed in the table.

Now there is an important enigma in the data displayed above. The low-mass mock

Table 1. Neutral "Atoms" Inferred from Presence of -e/2 FC Ions.

Nuclei with sub-quarks on them.	Number of +hemitrons	Number of electrons	Element mocked named in quote marks Data from presence of -e/2 ion peaks.
Three D.	3	5	"Boron" at 804 gauss—often hidden by $^{19}F^-$ peak
Three ^{4}He.	3	8	"Oxygen" observed at 1021 gauss.
Three ^{6}Li.	3	11	"Sodiu" at 1199 gauss—often hidden by $^{11}BO_2^-$
Three ^{7}Li.	3	11	No "sodium" peak observed for ^{7}Li.
Three ^{9}Be.	3	14	Small "silicon" peak observed at 1425 gauss.
Three ^{10}B.	3	17	Small "chlorine" peak observed at 1493 gauss.
Three ^{11}B.	3	17	Moderate "chlorine" peak observed at 1558 gauss.
Three ^{12}C.	3	21	Off scale "calcium" peak observed at 1620 gauss.
Three ^{13}C.	3	21	Tiny "calcium" peak observed at 1680 gauss.

New Energy Times Archive

"atoms," in which each of the three nuclei have one more neutron than protons, have low intensity. They are completely absent at the magnetic-field value that the mock-sodium ion formed by the ^{7}Li triad should appear and are low in intensity in the case of the mock-silicon ion formed by the triad of 9Be nuclei and even in the case of mock-chlorine due to the triad of ^{11}B nuclei as noted below. The low intensity of these peaks suggests that a pair of these nuclei have combined forming a larger nucleus with two subquarks. During the nuclear combination it appears that two neutrons leave carrying off the bulk of the energy created by the two nuclei joining together. A pair of +hemitrons seems to be associated with some of these ions but the resolution is not good enough to be certain.

There is a small peak on recording A at 1425 gauss due to mock "silicon" with charge -e/2 that are based on three ^{9}Be nuclei with their subquarks—this peak is very small considering that one third of the atoms in quartz are silicon. An ion that is found in abundance from fused quartz is ^{16}O with two subquarks. It was formed in a mock "silicon" composite nucleus by a pair of ^{9}Be nuclei with subquarks combining with the emission of a pair of neutrons, so it is logical that it is an abundant FC ion. The data is not clear upon what fraction of these exotic ions have a pair of hemitrons present. On Fig. 4 a peak due to this ion that appears to be several times off scale and even this same peak on Fig. 3 is off scale. This ion seems to have exotic properties and appears to catalyze the production of heat in the "Potapov process"—or other excess energy water cavitation processes, so we will come back to discussing its properties in much more detail later.

The data included several -2e/3 ions due to nuclei that were observed to be bound to two subquarks and have a couple associated +hemitrons. The list includes ^{12}C, ^{14}N, ^{16}O, ^{24}Mg, ^{34}S, ^{40}Ca, ^{42}Ca, ^{47}Ti, ^{48}Ti, ^{63}Cu and ^{64}Zn—the correct A is displayed in the superscript but the element named is that element that is most frequently associated with that particular value of A. Actually, the effective charge of these "nuclei" is likely to be +(Z+4/3)e since the probable presence a pair of +hemitrons provides an extra unit of charge. This data, taken more carefully, appears to be a rich source of information to particle and nuclear physicists.

Now an important observation in the analysis of this data is the fact that the binding energy of subquarks to nuclei is rather close to being 15 MeV per nucleon in it, and so is quite substantial. Many nuclei were observed to have two subquarks bound to them and in this case the average binding energy per subquark is ≈10 MeV per nucleon, but the accuracy of this data is poor.

Fortunately, the ion that catalyzes cold fusion seems to be Sq-^{4}He—the mock "oxygen" atom contains a triplet of these FC and CC ions. Sq-D, Sq-^{9}Be and Sq-^{8}Be and the mock "atoms or -e/2 ions" of "oxygen," "boron" and "aluminum" seem to play a role but a minor role. However, the 2Sq-^{16}O ions, with or without +hemitrons, seem to be especially important to the Moldova-type devices. So in the remainder of this section we will only discuss these particles and their character due to their CC charge, but just briefly. I am going to describe their properties from my interpretation of numerous experiments. Obviously many of these experiments need to be repeated to really get a true description of their exotic properties.

These 2Sq-^{16}O ions seem to have the propensity to come to the surface of fused quartz. Their FC charge of +e/3, or -2e/3, causes them not to fit into a lattice site, so they migrate to the surface to which it seems to be attracted. There they often surround themselves with whatever condensable vapor the surface is exposed to, but their droplet size is limited to a maximum of ≈350 nanometers. Many observations of these droplets have been made using oil-drop type of apparatus, such as designed by Felix Ehrenhaft of Vienna, Austria by before 1910. He had a very powerful microscope and he measured the fall rate due gravity and the rising rate with an electric field present on droplets which were very much smaller than used by Millikan—his observation path was also very much shorter. These droplets after being formed picked up many additional 2Sq-O ions and they divided up the condensed material into approximately equal size spheres. The tiny spheres were held together in assemblies by their color charges but they appeared to the eye as merely a droplet and fell almost as slowly as a single tiny droplet, so its total mass was badly misjudged when calculated from the data using the Stokes-Cunningham formula. Unfortunately, Ehrenhaft was claiming that the charges came in assorted sizes and that the smaller the droplets size, the smaller was the charge. See the paper by Ehrenhaft's student Irene Parankiewicz[12] and reply by R. Bär,[13] who showed that their Brownian motion indicated that their mass could be over a thousand time larger. Unfortunately, Bär interpreted this information as indicating that the observed composite droplet was a single large droplet with low density.

Much work was done with droplets of mercury. Ernst Rie[14], a physical chemist in Vienna, pointed out that the tiny mercury droplets ought to be evaporating rapidly because the surface tension would make the internal pressure very high. Sanzenbacher[15], a student of E. Regener at Stuttgart showed by use of oil-drop type of apparatus similar to that developed by Ehrenhaft, that droplets that had only charges of normal values on them did evaporate as calculated by Rie and when the droplet size got down to ≈200 nm in diameter he lost sight of them because of their low visibility and large Brownian motion. On the other hand, droplets with abnormal charge values evaporated very slowly and had greater visibility and much less Brownian motion than their mass from the rate of fall indicated they should have. So Parankiewicz actually was observing an assembly of tiny droplets.

The Nazi movement must have put Ehrenhaft under great stress, because he was Jewish. Amazingly, his judgment became more rational starting about 1934, in the authors opinion. Hitler sent his army into Austria on March 12, 1938 and somehow Ehrenhaft got out soon afterwards.

EIIA

Investment Opportunities in Over Unity Energy Production Systems

Information distributed Free by the EIIA Scientists, Invited to Provide Information For Investors

The Energy Investment Information Association, EIIA, distributes to potential investors information from scientists and research groups seeking investment funds. The EIIA is a non-profit organization and does not charge for its services. The EIIA seeks to promote non-polluting low-cost energy technologies and environmental technologies. If you would like to send or receive information concerning investment opportunities in these areas, please contact:

EIAA
163 S. Lincoln #C
Denver, CO 80209-1929 USA

(303) 777-5664; FAX (303) 722-7505

New Energy Times Archive

During that period he developed a condenser from which he was able to lower the observed droplet onto a microscope slide with inscribed coordinates after it had been measured going through many rising and falling excursions. The droplet was then photographed with 275 nm light; this gave him proof that it was a single droplet, told him that it was spherical, and also gave the value of its diameter. On a droplet of red selenium with a diameter of 298 nm and charge 0.67e he obtained the standard density of red selenium and thereby answered the criticism of Bär. Four droplets in the 700 to 850 nm range had integer values of e and reasonably good density values. The final tiny droplet was found by a student of his and had a Stokes-Cunningham diameter of 240 nm and had a charge of 0.60e, but they lost it before they measured the diameter optically. For a much more complete discussion of these experiments that should have been repeated by other people, see Ehrenhaft's final two papers on this subject[16,17]. These papers contain very many references.

The above information was impossible to correctly interpret in their era, because the explanation involved fractional charge and forces due to color charge, but the discovery of these properties was to be over a half century in the future. The latter experiments suggested to me that it was the force due color charge that caused the droplets to be formed around 2Sq-^{16}O ions.

An aspect of this phenomena seemed to play a role in SSC's experiment. When one joins two pieces of fused-quartz tubing together using an oxy-hydrogen torch, a frosty area appears on each side of the seal. The glass blowers call it "bloom" and flame it off after the seal has been made, so few people have seen it. The sample holder SSC used was stated to be "a new quartz tube oven," so it likely had bloom on it. So it is logical some of it made its way to the filament especially as a lot of 2Sq-O ions were observed. A 35 amu peak shows up on Fig. 2, which was taken at low filament temperature so must have been $OH{\cdot}H_2O$, while the cholorine masses 35 and 37 showed up in proper proportion only on the chart displayed in Fig. 4 and which was taken at the highest filament temperature. Now Smirnov in his book on *Negative Ions* notes on page 29 that the molecule $OH{\cdot}H_2O$ has its extra electron bound by 1.95 eV when measured by one method and 3.35 eV by another method. It seems reasonable to suspect many $OH{\cdot}H_2O$ molecules were collected on the 2Sq-^{16}O ions forming droplets which somehow got to the filament. In fact, so many of these molecular negative ions traveled through the narrow channel of the Wien filter to the detector region that the detector system did not function properly when chart recordings C and D were made; it needed a liquid nitrogen trap when their experiment was done.

SSC's discussion in connection with their Fig. 4 concerns high-electron--affinity ions that were collected from several sources. Their Fig. 4 showed that their negative charges were strongly bound. Only the $HP_4O_{11}^-$ ion showed up in their mass spectroscope analysis. My interpretation of what they were dealing with were many of these molecules around each 2Sq-^{16}O ion. The large oxygen abundance in HP_4O_{11} may well have made their CC binding especially strong. Of special interest was their estimated abundance in sea water as being 3×10^{-24}/nucleon.

These properties of the exotic 2Sq-^{16}O ions have been discussed in this section to help justify my contention that they are capable of catalyzing fusion in water containing a significant quantity of Sq-He ions. This has been done even though only part of the research work was done by SSC and they did not fully appreciate what they had observed.

Very late in the preparation of this paper, I noted the tiny 573 gauss peak on Fig.2 fitted two solutions, so both of them have been put on the figure. A deuteron with a subquark and a +hemitron could be obtained from mock "boron," based on a triple of D nuclei; however, I doubt if it is the observed solution, for there was nothing around SSC's fused-quartz tube to breakup these "boron atoms." The other possibility is an exotic ion of ^{4}He with two subquarks and two +hemitrons. They would have to be made by the decay of a pair of tritons with subquarks in mock "boron"—the formation of this "atom" in the distant past is interesting information. Even more interesting is the conjectured possibility of, for example, a red Sq-D and a green-blue 2Sq-^{4}He in water also catalyzing the formation of a ^{4}He nucleus from four protons.

IV. How Subquarks Can Produce Cold Fusion

Now that so many methods of producing cold fusion have been reported, it seems possible to speculate with fair confidence on how the subquark, with some assistance from the positive hemitron, can produce cold fusion. The fact that fusion can be produced in pure water ought to limit the conceptual ways cold fusion can take place, but it is not at all obvious how the energy is released in this case. In making this analysis we shall first briefly describe the sonic-generated cavitation phenomena as used by Roger Stringham and Russ George of E-Quest Sciences in deuterated water in contact with a palladium foil. Tom Benson[19] (see *IE* issue #1) has graphically shown how a high velocity jet is formed when a bubble in water collapses. The high-velocity water in the jet acquires a high temperature when it strikes the palladium foil. The jet then does two things: (1) it loads the palladium with deuterons ; and (2) its high temperature releases three subquarked alpha particles (Sb-He) from each of some of its mock "oxygen" nuclei. The surface of the thin palladium plate soon becomes pitted due to the heat from the many local reactions. Occasionally enough mock "oxygen" nuclei are in the jet, so the heat generated is sufficient to melt a hole in the palladium foil. This process makes it rather obvious that it is the Sq-^{4}He particles, observed in the data of SSC, which are the catalytic particles that cause the two deuterons to fuse together and release 23.83 MeV energy. This becomes kinetic energy that is divided between the Sq-4He and the ^{4}He nuclei. The jet first releases Sq-He ions in a local area where it struck the palladium foil and the reaction is kept going by both the alpha particles and the Sq-He ions striking and breaking up more mock "oxygen" nuclei into three Sq-He ions each; the high temperature releases even more Sq-He ions. Apparently it is stopped by the depletion of the local "oxygen" nuclei and deuterium, but another bubble starts up the nuclear reaction at another location. Since all cold fusion devices have water as their most abundant matter, this fact and this experiment proves that mock "oxygen" is the source of the reacting particles.

Now let us discuss briefly the Pons and Fleischman device. In it a palladium rod is loaded with deuterons by electrolysis, but it requires high-quality crack-free palladium in order for the deuterium concentration to become high enough for it to produce heat. It is often required that the electrolysis current be maintained for several days before the palladium becomes active. When an active pair of deuterons on the palladium lattice combine with an Sq-^{4}He ion, the complex nucleus formed immediately separates releasing 23.83 MeV as kinetic energy of the newly formed alpha particle and the catalytic Sq-He particle. If they did not separate fairly soon another 60 MeV of energy would be released due to the binding of the subquark to the four extra nucleons; however, it appears the energy available due to subquark attraction is very slowly radiated. Triplets of the

New Energy Times Archive

Sb-He ions are released by the bombardment of the mock "oxygen" in the water as discussed above. However, here electrolysis brings them to the palladium surface since they have charge +e/6. In the meantime recombination of the Sq-He ions that turns them back into mock "oxygen" ions is taking place, so the concentration never gets large because the recombination rate must increase at least as fast as the square of the concentration of Sq-He ions. The rate of recombination should decrease fairly rapidly with temperature, since the radius of the spherical zone in which the color charge forces can bring three differently colored Sq-4He particles together, ought to decrease with thermal agitation.

There is experimental indication that these ions and alpha particles are indeed present at high energies. This is shown by the fact that nuclear transitions have been observed to have been produced in the palladium of a Pons and Fleischman type cell. This fact was noted by Dr. Kevin Wolf of Texas A&M, has been discussed by Eugene Mallove[20] (see *IE* issue #2) .

A big improvement in the Patterson device of Clean Energy Technologies, Inc.[21] seems to me to be the reduction of the ratio of metal to mock "oxygen" so the Sq-He ions energy is not wasted by making collisions upon palladium nuclei. The covering of the thin layers of palladium by nickel and making fusion of hydrogen responsive to the same Sq-He ions is to me a wonderful mystery. A new model has very recently been demonstrated in which the operating temperature has been increased significantly.(See Jed Rothwell's report on SOFE ' 95 in this issue.-*Ed.*) The combination of the changes and the higher temperature has increased the power out divided by the power in up to 80/1. This is fantastic. The big disadvantage is that it appears to have a complicated structure to be fabricated.

Now for the problem of start up of the chain reaction in a Pons-Fleischman cell. One can wonder why this is not done by cosmic rays breaking up mock "oxygen" into three Sb-He ions, but that does not seem to happen. Adding lithium hydroxide seems to produce a startup in a few days of time if the electrolysis current is kept on. A Sq-D ion may have gotten into their electrolyte from the mock "boron" in their Pyrex beakers. It is plausible that the Sq-D ion combines with a ^{6}Li nucleus and forms an alpha particle and a Sq-^{4}He ion. The $\approx$24 MeV released goes into kinetic energy of the two ions, so three more Sq-He ions may be released and thereby the particle of a single reaction may start a chain reaction. On the other hand, E. Mallove has informed me that aluminum is also used nowadays for that purpose. Now three Sq-^{9}Be ions will form a mock "aluminum" atom provided only one +hemitron is present. If a Sq-D ion approaches a single Sq-^{9}Be ion, the pair could be converted into Sq-^{3}He and Sq-^{8}Be ions with release of 4.6 MeV as kinetic energy. Since both Sq-^{3}He and Sq-^{9}Be have subquarks, the force due to their color charges helps draw them into reaction range fairly quickly. Afterwards the moving Sq-^{3}He ion could break up a mock "oxygen" into three Sq-He ions, or after being slowed down, it may start fusion by itself. Note that if ^{8}Be has a subquark attached, it is stable, so another Sq-^{4}He ion can not be released from it.

Let us now consider how heat energy may be developed in the Potapov device of Moldova (if real and verified), or similar excess energy cavitation devices. Since there is only water present in the cavitation region, the plausible methods of heat production are quite restricted. Now while the units of this device brought to the USA have not produced more heat than their motor put into them, Potapov's company is selling a large number of these units under the name "Yusmar," so it is difficult to believe that they are not working as represented. Imagine heating one's home with a simple electric heater—I cannot believe these poor people are so gullible as to be fooled that way, for the size of their heating bill would make the difference quite obvious. Their non-operation in the U.S. lab tests was extensively discussed in the last issue of *IE* by Mallove, Driscoll, and Little[23]. The problem may be that the units received are not creating cavitation adequately. Now the sixth paragraph of Mallove's discussion noted that a properly functioning Yusmar unit in Moscow was observed to put out a "deafening" sound, but none of the units over here are particularly noisy. Enough work has been done with them in the USA to believe that getting them to cavitate is not a design problem, and my discussion in the next paragraph assumes that is not the problem.

So the baffling problem is what nuclear reaction, or even two sequential nuclear reactions, may be taking place in Moldova to release so much energy? The Stringham device demonstrated that cavitation can breakup the mock "oxygen" nucleus into three Sq-He ions, but it had deuterons on a palladium lattice to generate heat. It is barely plausible to believe Sq-^{4}He ions could catalyze two ^{16}O nuclei to combine forming ^{32}S. Since only 16.5 MeV of energy is released per ^{32}S atom produced, the Coulomb barrier must far too great for this reaction to take place. Another possibility is that their water has a some contamination with boron and lithium, so the startup reaction discussed above takes place. I suspect if it did, the quantity required would be quite obvious to those that consume the water.

A somewhat more plausible reaction that might take place is for a Sq-He ion to pick up four protons in sequence with the 2nd and 3rd protons rapidly turning into neutrons. Then when the fourth proton is picked up by the revised Sq-^{7}Li ion, it immediately separates into ^{4}He and Sq-^{4}He and they fly apart with a total kinetic energy of 19.77 MeV. Actually the total energy released per helium atom formed in this reaction is 26.7 MeV. If that is what takes place in their device, it would be wonderful. Maybe the reason it does is their water has a much higher concentration of the mock "oxygen" atoms and that gets the cavitation to be violent enough. But I suspect that this reaction, even if it does occur, goes far too slowly.

There exists a complex particle in the data of Figs. 3&4 which consists of ^{16}O combined with two subquarks of different colors—designated here as 2Sq-^{16}O. A pair of +hemitrons having anticolors to them may be present, but if so likely do not play a significant role. Now this particle seems to have quite exotic properties. Its capability of attracting matter to condense around it up to a radius of 200 nm was discussed in the last section, and several other properties were discussed. If a Sq-He ion with, for example, a red subquark comes close to a 2Sq-^{16}O ion with green and blue subquarks, the attraction is fairly strong. In this much more intense field environment, it is conceivable that the same reaction discussed in the paragraph above would proceed at a much more rapid rate. This is exciting, for every helium atom formed yields 26.7 MeV. What appears to be needed to get a high temperature in the Potapov device over here is to greatly enrich our water with the exotic 2Sq-^{16}O ions. Enriching it with mock "oxyge" atoms or ions might help too, but then I believe the same thing can be said for the Patterson system too. I am not trying to discuss here how this enrichment might be achieved, except to say it requires a program as discussed in the next section. Maybe the simplest way is to import water from Moldova!

V. Design of an Improved Apparatus to Remove FC Ions from Quartz Sand or

New Energy Times Archive

Fused Silica.

The apparatus, shown in Fig. 1 of SSC's paper, worked well considering the small volume of fused-quartz from which their FC ions were obtained. The volume of quartz that can yield FC ions is very much larger in this proposed design, shown here as Fig. 5. On the other hand, the author's understanding of the manner in which SSC's apparatus functioned is likely not as complete as it should be.

Fused quartz has the highest diffusivity of all the glasses except Vycor, which is also fused quartz made by a process that leaves it slightly porous. Note that diffusivity increases rapidly with temperature. SSC operated their oven at 800 ^{o}C, but the ideal temperature for use here is unknown. A common commercial oven operates up to 1100°C.

There is the question of what type of quartz should be used? Modern fused quartz is purified by a factor ≈40 relative to that made from a good grade of quartz sand. That a significant fraction of the FC ions could come through the purification process is questionable. It seems likely that a good grade of quartz-sand would be a good source of the FC ions. Diffusion is known to take place in quartz, except it is restricted to being along the axes of the crystals. An advantage of quartz sand is that it would be very easy to change a sample of it. On the other hand, tubular samples made from fused-silica could also be used in this apparatus—fused silica is the modern name for fused quartz made directly from quartz sand.

An electric field across the sample greatly increases the migration rate of ions through it. It would be simpler if the inside electrode could be a thin evaporated gold film; but fearing it would trap the ions, I have designed the inside of the small fused-quartz tube in the apparatus of Fig 5. to have ≈12 fine wires of noble metal strung along it surface. The apparatus has been designed so it is not difficult to string up the wires and is designed so the small fused-quartz tube can be installed or removed without damaging the wires. A support plate with a stud going through the exit hole and screwed to the central rod will keep the gold wires under tension during these operations. Still many of the ions coming out of SSC's oven may have diffused through their gold foil, so to find the answer to this problem tests are needed.

Judging by the experience of SSC, the temperature when raised to 800 ^{o}C causes many ions to travel back and forth between surfaces of the annular space. The ions that make the crossing with a DC field present must evaporate from one surface as positive ions and the other surface as negative ions; however, an important ion that has a strongly bound electron is 2Sq-^{16}O. This ion has charge -2e/3 with its extra electron which is bound by 5.9 eV according to Lackner and Zweig[10] and even ≈8 eV if accompanied by a pair of +hemitrons. Now SSC passed argon gas at atmospheric pressure through the annular gap, and that seems to have been effective in transporting their FC ions to the outside of their annular space. Since they used -600 volts on the outer cylindrical surface, the argon flow rate must have been rather high. In order to keep this particle in the gap as much as possible, it seems more logical to make the voltage on the wires to be AC and to use a much lower value than 600 volts.

The flow of argon contributes in another important way. Ions of normal matter evaporate frequently with neutral charge, so they get caught up in the argon gas flow and are carried to the outside. This purification trick may function significantly better if both surfaces are metal as SSC used in the neck of their sample holder. It will be easy to place a gold foil on the inside of the lower part of the small diameter tube, if this is so.

The argon flows out of the center hole of this apparatus and is still carrying along the FC ions. There they are electrically attracted to the end of the gold plated rod which is made cool enough that the ions stick to it. The rod shown is 3/16 inches in diameter but might be only 1/16 inch—that would improve the resolution of the mass analyzer. The design of the holder of the gold-plated collecting rod is only schematic—the insulating support is not shown. SSC used +300 volts to attract their ions to their cold filament.

The rod can be heated by a high frequency oscillator, as used in microwave ovens, according to the operator of the LANL mass spectrograph. Since we are interested primarily in FC ions and they are already charged, no plasma needs to be created—SSC's experience showed sufficient negative ions of normal atoms and molecules will be present to calibrate the mass-per-unit-charge scale. It should be used on a qaudrupole mass analyzer whose peaks are sorted out by their mass per unit charge as with a Wien filter; however, its resolution is very many times greater than SSC obtained using only 300 volts across their deflection plates one centimeter apart. An electron-multiplier detector system similar to that used by SSC—see their Fig. 2—will be required, but a complete system is still commercially available, I believe.

Still, much information could be obtained by using a setup quite similar to that used by SSC, but without the ferro-manganese

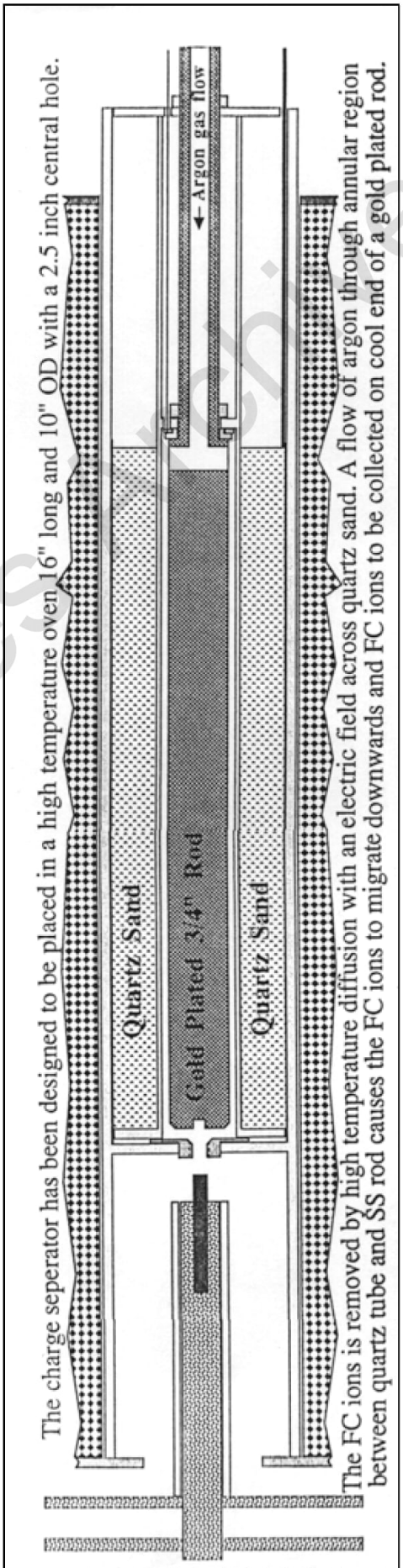

Fig. 5. FC ION COLLECTOR

New Energy Times Archive

nodules. A simple fused-quartz tube, or perhaps much better a fused-silica tube, may be used. The central rod may be supported from the one end off the fused-quartz tube and the cooled rod that collects the ions may be supported from the other end. Both rods may be of nickel, or perhaps steel, but plated with gold. This simple setup should demonstrate the existence of most of FC ions observed in SSC's apparatus. If so, this apparatus can be used to demonstrate whether the FC ions will diffuse through a thin evaporated gold layer needed for the external and internal electric fields.

It would be useful if FC ions that exist in water could be collected in such a manner that their concentration could be analyzed. This may well be possible. The water is placed in a sealed jug resembling the space the quartz sand occupies in Fig. 5. The fused-quartz tube between the water and the argon is made as thin as practicable. Let the device be enclosed in a pressure vessel capable of withstanding ≈20 atmospheres or ≈213°C. Let the pressure of the argon, which both surrounds the jug and flows through the annular space inside the tube that the FC ions must diffuse through, be adjusted by the measured temperature to equal the vapor pressure of the water. Let the potential difference between a conducting layer inside of the outer wall of the jug and the wires on the inside of the diffusion fused-quartz tube be as great as practical. If this is allowed to remain in this condition for perhaps a day, many of the lighter FC ions may have diffused through and the heavier ions will have diffused deep enough to be entrapped. The water is then removed and the jug is again filled to high pressure with argon so the voltage to cause rapid migration can be applied again. The temperature can then be taken to high enough value so that the FC ions in the fused quartz go on through to the flowing argon. The FC ions are collected on the end of a cool gold-plated rod from the flowing argon in both phases of this test.

There may be danger that the Sq-He and the 2Sq-O ions, collected in the water on the outside of the small tube that they diffuse through, may explode. So nobody should be too close to the apparatus during the operation!

VI. Conclusions and Speculations

The basic conclusion is that scientists should search for these particles and if found, means for collecting them in quantity should be developed. Once we understand their properties, we will have better ideas about designing reactors to transform the energy of protons efficiently into useful energy.

It appears that the water in the region of Moldova may have a higher concentration of subquarked nuclei then that in the USA. A soeculation: Could this be because a comet rich in hapalons struck that area at some time in the past?

It is possible that many nuclear reactions that are taking place in the sun are due to these particles participating in reactions that do not lead to neutrino production. To understand this possibility will take considerable investigation of which reactions might be taking place in the sun.

Another reaction observed in cold fusion is the production of tritium. The author suspects the catalyzing particle in this case is the +hemitron. If such a particle gets in between a pair of deuterons, it may allow a neutron to transfer, but not a proton. The energy released in this case 0.93 MeV but should be enough to cause the three different particles to fly apart, so this energy is also released as kinetic energy—the pollutant in this case is tritium itself. This subject was not discussed in this paper.

The author ends this paper with one grand speculation—stimulated by the low age of the universe obtained by the latest Hubble constant measured using the Hubble orbiting telescope. Perhaps the particles created in the Big Bang were not quark, but instead these three hapalons. So the Big Bang could have occurred much earlier than the recent measurements indicate. Quasars are where the hapalons have collected and are forming nucleons. Nucleons may well fly away from the quasars with very high velocity since the mass of a nucleon is only about one quarter of the mass of its hapalon constituents.

References

1. Murray Gell-Mann, *Phys. Lett.* **8**, 214-15 (1964).
2. George Zweig, CERN 8182/TH 401; CERN 8419/TH412 (1964). He was unable to get his paper published in a journal in 1964 because of complaints from several referees.
3. L. Lyons, PHYSICS REPORTS (Review Section of *Physics Letters*) 129, No. 4 (1985) 225-284.
4. P. F. Smith, *Annual Rev. Nucl. Part. Sci.* **39**, 73-111 (1989).
5. S. Cecchini et al, "Fragmentation cross sections and search for nuclear fragments with fractional charge in relativistic heavy ion collisions," *Astrophysics* **1** (1993) 369-376.
6. Michael Riordan, *The Hunting of the Quark*, 1987 by Simon and Schuster / Touchstone Books, New York City. (Look under "Color" in the index.)
7. C. M. Stevens, J. P. Schiffer, and W. Chupka; *Phys. Rev.* **D14**, 716 (1976).
8. Louis Lyons, *Progress in Particle and Nuclear Physics* **10**, 227-304 (1983).
9. H. Fritzsch and G. Mandelbaum, *Phys. Lett.* **102B**, 319 (1981) and **109B**, 224 (1982).
10. Klaus Lackner and George Zweig, *Phys. Rev.* **D28**, 1671 (1983).
11. W. A. Chupka, J. P. Schiffer, and C. M. Stevens; Phys. Rev. Lett. 17, 60 (1966).
12. Irene Parankiewictz, *Physik. Zeitschr.* XVIII, 167 (1917).
13. R. Bär, *Physik. Zeitschrift.* XIX, 373 (1918).
14. Ernst Rie, *Ann. d. Physik* **63**, 759 (1920).
15. Richard Sanzenbacher, *Zeitschrift für Physik*, **39**, 251 (1926).
16. Felix Ehrenhaft, *Physik. Zeitschr.* XXXIX, 673 (1938).
17. Felix Ehrenhaft, *Phil. of Science* **8**, 404 (1941).
18. B.M.Smirnov, *Negative Ions*, 1982 by McGraw-Hill International Book Company.
19. Tom Benson, *Infinite Energy*, Vol. 1, No. 1, p.37 (1995).
20. E. Mallove, *Infinite Energy*, Vol. 1, No. 2, p.30 (1995).
21. Dennis Cravens, *Infinite Energy*, Vol. 1, No. 1, p.18 (1995).
22. C.P. Tinsley, *Infinite Energy*, Vol. 1, No. 2, 33 (1995).
23. E. Mallove, *Infinite Energy*, Vol. 1, No. 3, 16 (1995).

Dr. Joseph McKibben in *People* Magazine

In the July 17, 1995 issue of *People* Magazine, Dr. McKibben shared his memory of the first atomic bomb test, Trinity, at Alamagordo, New Mexico:

"Since I was the person responsible for activating the timing system for the bomb, I spent the night at the base of the tower. I fell asleep about 2 a.m. and dreamed that one of my colleagues was sprinkling the bomb with a garden hose. When Bainbridge woke me up 2 hours later, the weather had cleared enough to proceed with the test, and the other scientists had gone to prearranged stations around the area. We turned on a set of switches at the tower to arm the bomb and then drove to the command bunker 10,000 yards south of Ground Zero.

"At 5:10, I threw the switch that started the countdown at minus 20 minutes."

New Energy Times Archive

The Piantelli *et al* Patent Issues.....

ENERGY GENERATION AND GENERATOR BY MEANS OF ANHARMONIC STIMULATED FUSION

EDITOR'S NOTE: One of the most significant developments in the cold fusion field was annouced at a seminar at the University of Siena, Italy in February 1994. Professors Francesco Piantelli, Sergio Focardi, and Roberto Habel revealed their work on high-temperature cold fusion using metals immersed in hydrogen atmospheres. Now their work is covered by an international patent, which we reporduce here. The Fiat Motor Corporation of Italy continues to support this work and related cold fusion activities.

INTERNATIONAL APPLICATION PUBLISHED UNDER THE PATENT COOPERATION TREATY (PCT)

(51) International Patent Classification: G21B 1/00

(11) International Publication Number WO 95/20816

(43) International Publication Date 3 August 1995 (03.08.95)

(21) International Application Number: PCT/IT95/00008

(22) International Filing Date: 27 January, l995 (27.01.95)

(30) Priority Data: SI94A000001 27 January 1994 (27.01.94) IT

(71) Applicants (for all designated States except US): FOCARDI, Sergio [IT/IT]; Via Ranzani, 5/10, I-Bologna (IT). HABEL, Roberto [IT/IT]; Via dei Tigli, 97, I-Ariccia (IT).

(71)(72) Applicant and Inventor: PIANTELLI, Francesco [IT/IT]; Via Belriguardo, 112, I-Siena (IT).

(74) Agents: BARDINI, Marco, Luigi et al.; Societa Italiana Brevetti S.p.A., Corso dei Tintori, 25,1-50122 Firenze (IT).

(54) Title: ENERGY GENERATION AND GENERATOR BY MEANS OF ANHARMONIC STIMULATED FUSION

(57) Abstract

A process of energy generation and an energy generator by means of anharmonic stimulate fusion of hydrogen isotopes absorbed on metal comprising a charging step on a metallic core (l) of a quantity of hydrogen isotopes H and D; a heating step in which said core (l) is heated (9) to reach a temperature higher than Debye's temperature of the material composing the core; a startup step wherein a vibrational stress is produced with a rise time less than 0.1 seconds which activates a nuclear fusion of said hydrogen isotopes; a stationary step during which it is exchanged (3,5) the heat produced by the H+D nuclear fusion reaction which occurs in the core (l) because of a steady keeping of a coherent multimodal system of stationary oscillations.

TITLE

ENERGY GENERATION AND GENERATOR BY MEANS OF ANHARMONIC STIMULATED FUSION

DESCRIPTION

Field of the invention

The present invention relates to the field of energy production by means of nuclear fusion and, more precisely, it relates to a process for generation of energy by means of anharmonic stimulated fusion of hydrogen isotopes adsorbed on a crystal

Furthermore, the invention relates to an energy generator which carries out said process.

Description of the prior art

The problem of procurement of energy has driven industry and research laboratories more and more to study new sources of energy. Among these, a particularly interesting source is the nuclear fusion.

During the studies on nuclear fusion, one applicant has, to that end, realised a "Device for the startup and control of the process of energy production obtained by means of excitation of vibrations of the crystal lattice of a material containing deuterium," described in Italian patent application no. SI/92/A/000002.

The process upon which the functioning of said device is based comprises a step for the preparation of an electrode composed of a metallic material formed either by a single metal or by an alloy of metallic components capable of receiving deuterium, and having a precise crystalline structure, e.g. isometric. Said step of preparation of the electrode comprises first an operation of degassing the electrode in order to clean its crystalline structure. Subsequently, a certain quantity of deuterium (D) is let into the crystal lattice of the electrode at a pre-established temperature and pressure. Then, when the ratio of the number of deuterium atoms to the metallic atoms (D/Me) exceeds the threshold limit of 0.7, a fusion reaction D+D is activated among the deuterium atoms adsorbed in the crystal lattice following the application of a disturbance which sets the consecutive lattice planes into push-pull vibration. Systems for removal of the thermic energy generated by the fusion are provided for.

The device and process illustrated above, however, present considerable difficulties when it comes to actually putting them into practice. First of all, the use of deuterium is expensive in the case of industrial application of the device. Furthermore, the startup step of the reaction is scarcely controllable or repeatable. In fact, in many cases, the amount of energy obtained has been different than that expected on the basis of the energetic values attributable to a D+D reaction and, in any case, has been not constant in identical initial conditions of preparation and startup.

Summary of the invention

An object of the present invention is, instead, to provide a process for the generation of energy which is able to accomplish a fusion of hydrogen isotopes adsorbed on metal and which can be inexpensively reproduced at an industrial level as well as easily activated and shutdown.

A further object of the present invention is to provide an energy gen-

New Energy Times Archive

Subscribe to 21st CENTURY

SCIENCE & TECHNOLOGY

The magazine that brings you tomorrow's technologies today.

U.S. and Canada
Foreign Airmail
$20 for 4 issues (1 year)
$40 for 4 issues (1 year)
$38 for 8 issues (2 years)
$78 for 8 issues (2 years)

Send check or money order (U.S. currency only) to:

21st Century, Dept. IE, P.O. Box 16285, Washington, D.C.

Your* ad could be in this space. *Call or write to Cold Fusion Technology for ad rate information....NOW!

Cold Fusion Technology
P.O. Box 2816
Concord, NH 03302-2816

Phone: 603-228-4516
Fax: 603-224-5975

erator which activates the abovementioned process.

These and other objects are accomplished by the present invention wherein the generation process is characterised by the fact that it comprises:

- a charging step in a metallic core of a quantity of hydrogen isotopes H and D which are adsorbed in the crystal lattice of said core;
- a heating step in which said core charged with hydrogen isotopes is heated to reach a temperature higher than the threshold temperature corresponding to Debye's constant temperature of the material composing said core;
- a startup step of said core wherein a vibrational stress is produced which activates a nuclear fusion reaction of said hydrogen isotopes;
- a stationary step during which it is possible to exchange the heat produced by the H+D nuclear fusion reaction which occurs in the core because of a steady continuation of a coherent multimodal system of stationary oscillations.

A step is also provided for the shutdown of the fusion reaction, in case it is necessary to interrupt it, by means of production of a further vibrational stress which disorganizes said coherent multimodal system of stationary oscillations.

The threshold temperature which must, necessarily, be surpassed in said heating step is Debye's constant and which, for many of the metals utilizable, is set out in table I. To have a greater probability of success of the reaction, said threshold temperature must be exceeded by a ΔT comprised between several degrees and several tens of degrees, according to the type of material in which the active core is formed. Debye's constant can, in any case, be calculated analytically, since it is equal to $h/K^*\nu_{cr}$, with h being Planck's constant, K being Boltzmannws constant and ν_{cr} being a typical frequency of each material (for further details, see Charles Kittel, Introduction to Solid State Physics, John Wiley & Sons, New York).

The type of hydrogen to be adsorbed in said core is preferably natural hydrogen or, in other words, having a ratio between isotopes D and H of about 1/6000. It is however possible to obtain the reaction also with natural hydrogen depleted of or enriched with deuterium, with a ratio of isotopes D to H in any case higher than 1/80000 and preferably comprised between 1/10000 and 1/1000.

The novel characteristic of the generator is that it is provided with a reactor comprising:

- an active core, on which natural hydrogen possibly enriched with deuterium is adsorbed;
- a generation chamber containing said active core;
- a prechamber for heating of a thermal carrier fluid;
- a dome for the collection of said thermal carrier fluid;
- a plurality of tubes wherein said fluid flows from said prechamber to said collection dome crossing said generation chamber.

Brief description of the drawings

Further characteristics and advantages of the process and the generator according to the present invention will become apparent in the description which follows of some of its possible embodiments, given as examples and not limitative, with reference to the attached drawings in which:

- figure 1 shows a longitudinal sectional view of a first embodiment of the generator according to the invention;
- figure 2 is a longitudinal sectional view of a second embodiment of the generator according to the present invention;
- table I sets out the Debye's constant for several metals and alloys.

Description of the preferred embodiments

With reference to figure 1, a generator for actuating the process according to the invention comprises a generation chamber 2 crossed by a tube nest 5 in copper which extends between two flanges 10 welded to a support shell 11 which externally defines chamber 2. Tubes 5 cross flanges 10 and communicate with a prechamber 3 comprising an annular jacket 3a delimited by a cylindrical shell 13 with inlets 3b. Furthermore, tubes 5 communicate with a collection dome 4 communicating through flanged nozzles 14 with means for heat exchange and a circulation pump which are not shown.

Chamber 2 communicates, through axial ducts 6 which cross dome 10 on one side and prechamber 3 on the other side, with a gas tank and an air pump not shown by means of connections of a known type placed external-

New Energy Times Archive

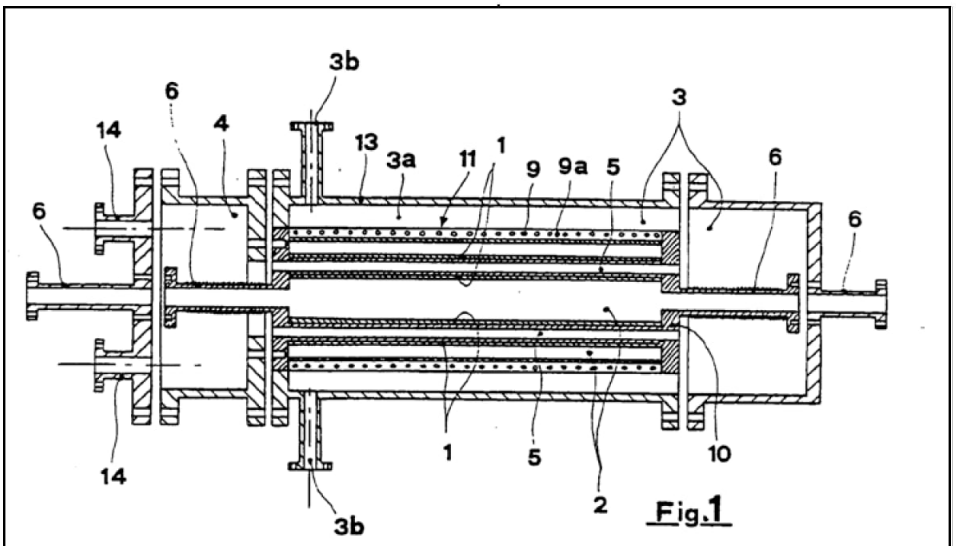

Fig.1

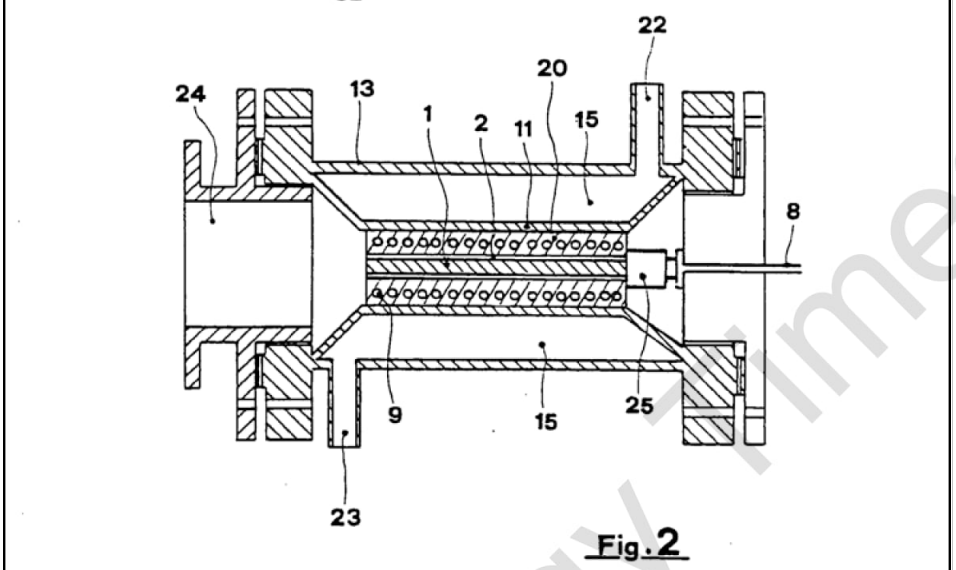

Fig.2

ly of shell 13. Ducts 6 are suited to feed hydrogen or other gases into chamber 2.

On tubes 3, a metallic active core 1 of a thickness of several millimetres is electroplated. Around support shell 11, an electric coil 9, for example immersed in a ceramic matrix 9a, is wrapped.

The fluid, coming from inlets 3b and crossing tube nest 5, preheats itself in the jacket 3a, and removes the heat generated in core 1 during an anharmonic fusion reaction of the isotopes of hydrogen, the startup of which will be described further on.

With reference to figure 2, another embodiment of the generator according to the invention comprises an active core 1 having the form of a cylindrical bar inserted in chamber 2 contained in a heating cylinder 20 in which an electric winding 9 is immersed.

A jacket 15 formed by a support shell 11 and a cylindrical shell 13 allows for the passage of a thermal carrier fluid which enters through an inlet 22 and exits from an outlet 23 after having axially lapped shell 11. The gas present in chamber 2 is controlled through chamber 24 communicating with a gas tank and with an air pump not shown by means of connections of a known type. Core 1 is in contact with an electrode 25 suited to transmit to it an impulse of a piezoelectric type to activate the anharmonic fusion reaction of the hydrogen isotopes as will now be described.

In both the generators of figures 1 and 2, windings 9 have a multiple function since, besides generating a magnetic field necessary for the adsorption of the hydrogen by the core, they also have the function of heating the chamber of the thermal carrier fluid as well as the function of startup of the reaction, for example by means of an electrical impulse with a magnetostrictive effect.

Core 1, in the first case shown (fig. 1), is a metal layer, for example a multiple layer of Nickel and Chromium alternated, while in the second case (fig. 2), it is a cylindrical metallic bar, for example of NickelChromium steel. Core 1 preferably has a homogeneous surface without, in so far as possible, any nicks or defects. In the crystal lattice of core 1, by means of known techniques, natural hydrogen, having a ratio of D isotopes to H isotopes of about 1/6000, is made to adsorb. The percentage of deuterium D with respect to the hydrogen H can also be greater than that indicated even though, with D/H ratio greater than 1/1000, there may not be an economic advantage in the exploitation of the reaction due to the current costs of deuterium, as well as the difficulty of interrupting the reaction with a normal shutdown operation as will be described further on.

1) Charging step

Among the known techniques for charging hydrogen in the active core so that the hydrogen isotopes become chemically adsorbed in the crystal lattice, there are the following:

- electrolytic adsorption -
-immersion of the core in a gaseous environment containing hydrogen at a pre-established temperature and pressure;
- immersion of the core in solutions of HCl, HNO_3, H_2SO_4;
- immersion of the core in galvanic baths containing, for example, NH_3 when the metal constituting the core is deposited on a support composed of a material such as Cu or ceramic.

Some materials require the application of a magnetic field having an intensity greater than the saturation field, generally greater than 0.1 Tesla. In the two cases of the generators described above, the magnetic field is produced by winding 9.

The absolute pressure of the hydrogen inside the generation chamber must be maintained at values preferably comprised between 1 and 1000 millibar and, in any case, lower than 4 bar, beyond which adsorption no longer takes place unless at extremely high pressures (> 50 bar).

The chemical adsorption of the hydrogen isotopes in the metal of the core causes the disassociation of the H_2 and D_2 molecules and the creation inside the crystalline structure of the core of covalent bonds (hydrides) between the H and D atoms with the metal. The electrostatic repulsion among the hydrogen atoms is screened by the excess of negative

New Energy Times Archive

charge created by the free electrons of the metal. Therefore, the decrease of the electrostatic repulsion due to these bonds allows for the bonded atoms to approach one another more closely than is normally possible with free atoms in identical conditions.

When the crowding of the H and D isotopes adsorbed on the metal in the proportion stated above is sufficiently high, for example with a numeric ratio of hydrogen isotopes to metal atoms greater than 0.3, a strong reticular vibration, however created, can make the two systems Me+H and D+Me approach one another, so that atoms H and D come to be at a distance lesser than that in which the nuclear force enters into play.

2) Heating step

According to the invention, only when the temperature of the active core 1 is raised to a value higher than Debye's constant of the material composing the core, of which the values of many metals are listed in table 1, is it possible to successfully carry out the startup of the fusion reaction. In fact, only above said temperature do the number of anharmonic oscillations of the crystal lattice, in which the hydrogen is adsorbed, become greater than the number of oscillations of harmonic type with following increase of the probability that the vibrational wave vectors add up one another. It is, however, necessary that, in order to successfully activate the reaction, Debye's constant be exceeded by several degrees to several tens of degrees according to the metal used for the core, so as to allow the "population" of anharmonic oscillations to sufficiently exceed that of the harmonic oscillations.

The heating step can be carried out by means of any known system, for example thermoelectric heating, oxidation of combustibles or other exoenergetic chemical reactions, recombination of ions into polyatomic molecules, laser impulses and immersion in hot fluids.

3) Startup step

At the points of the core on which the hydrogen has been adsorbed or, in other words, in proximity to the external surface of the core, a push-pull oscillation of the lattice can successfully cause two hydrogen isotopes, respectively hydrogen H and deuterium D, to approach one another more closely than the critical distance at which, as described above, the nuclear forces enter into play.

Table I. [DEBYE'S CONSTANTS]

Al	428 °K	Mg	406 °K	Ta	250 °K
Be	1160 °K	Mo	440 °K	Sn	195 °K
Cd	209 °K	Ni	440 °K	Ti	428 °K
Bi	118 °K	Nb	320 °K	W	405 °K
Cr	610 °K	Pd	374 °K	Zn	300 °K
Cu	344.5 °K	Pu	340 °K	Li	335°K
Ge	370 °K	Rh	478 °K	Gd	325 °K
Au	162.4 °K	Si	640 °K	Zr	292 °K
In	111 °K	Ag	226.2 °K	Hf	252 °K
Fe	464 °K	Na	158 °K	Sb	199 °K
Constantan	384 °K				
Monel	374 °K				
Clunil	465 °K				

According to the invention, it is possible, in the conditions described above and only in those conditions, to activate the localised nuclear reaction described above, producing a stress in the active core capable of producing the coherent addition of a great number of wave vectors thus obtaining a local gigantic vibrational impulse capable of sufficiently exciting the crystal lattice where the hydrogen isotopes are adsorbed. Local volume variations due to expansion of the active core surface have been measured which are 20 times greater than those measured in the non active portion of the core.

Each H+D fusion produces ^{3}He, freeing 5.5 MeV, which is sufficient energy to completely vaporise the area surrounding the point in which the reaction has occurred. In this case, the complete H+D reaction would be H+D = ^{3}He + γ of 5.5 MeV. However, in this case, no g photons or other particles are freed from the core, since the duration of covalent hydrogen-metal bonds is on the order of 10^{-15} - 10^{-16} seconds, whereas the nuclear interaction time is on the order of 10^{-13} - 10^{-21} seconds. Therefore, the energy freed from the fusion can dissipate through the lattice without emission of particles or g photons. (See Max Born, Atomic Physics, ed. Blacky and Son, Glasgow; A.F. Davydov, Teoria del nucleo atomico, ed Zanichelli, Bologna; G.K. Werthaim, Mössbauer Effect)

In more detail, after having exceeded the Debye's constant, the probability that the H+D reaction is activated is greater when the anharmonic terms of the interatomic displacement become important, and this can happen only when the temperature is sufficiently higher than Debye's constant, at a characteristic temperature for each material. Under these conditions, following the production of a sufficiently strong stimulus by means of an external action, the quanta of vibrational energy crossing the crystal lattice, instead of oscillating in a disorganised manner, coherently interact with following addition of the wave vectors tangentially to the surface of the active core and with consequent creation of

New Energy Times Archive

amplified energy peaks in particular points (loci). The wave trains which move on the active material of the core, besides creating localised fusions, form a coherent multimodal system of stationary oscillations inside portions of the active material of the core, thus causing a negative change of entropy and consequent discharge of heat, which can be exploited by the generator according to the invention.

Subsequently, the stationary wave continues to maintain itself by means of the pump effect produced by the H+D reactions. In fact, because the configuration of the lattice is altered by the localised vaporisations caused by the individual H+D fusions displaced in said loci, the wave vectors add up again in other loci, close to the previous ones but where the lattice is still intact, and activate further H+D reactions. With repetition of the fusions, the core comes to have a surface with a plurality of substantially equidistant cavities separated by tracts of still intact lattice, and the mass of the active core becomes progressively smaller as a result of the successive localised vaporisations.

A further, significant contribution to the maintenance of the stationary wave is provided by the interaction of the electrons with the lattice, especially in the presence of a variable electromagnetic field. In fact, every transition from one Fermi's state to another involves the emission of a particle of a given frequency and wave vector. (See Charles Kittel, Introduction to Solid State Physics, John Wiley & Sons, New York)

The startup step can be carried out by means of various known types of impulses, as long as the rise time is less than 10^{-1} seconds.

In cases in which the active core is composed of pure metals or their compounds with other elements or substances, steels, stainless steels, alloys or metallic systems of single or multiple layer, the startup step can be carried out according to one of the following methods.

- Thermic stress method obtained through pressure gradients: polyatomic gas such as H_2, D_2, HD, HT, C_2H_4, NH_3, N_2, O_2, etc., is inserted in the generation chamber with negative enthalpic difference of physical adsorption (DH) and a corresponding pressure gradient comprised between 1 millibar and 4 bar. As already known, the gas introduced generates thermic stress on the surface of the active core, due to a transitory dissociation of the gas molecules and further sudden exoenergetic reaction forming again the molecules and catalysed by the surface of the core itself. Such thermic stress causes the formation of wave trains of reaction and quick startup of the process of energy production through nuclear fusion between H and D, as described above. The embodiment of figure 1 is designed for exactly this type of startup in which the polyatomic gas is introduced through ducts 6 shown in figure 1. During the reaction, by means of the passage of current through winding 9 placed along the entire length of the core 1, a constant magnetic field comprised between 0.2 and 1.5 Tesla is maintained.

- Method with mechanic impulse; a mechanical impulse of torsion, traction or compression is applied to the ends of the active core with an intensity and rise time, for example 10^{-1} seconds, sufficient to provoke a structural deformation which then activates the fusion process.
- Method with electric striction: an electrical current impulse is applied to the ends of the active core with suitable peak values and rise times, for example 1000 Ampere for 30 nanoseconds, to provoke a structural deformation which then activates the fusion process. The embodiment of figure 2 is designed also for this type of startup, wherein the alternate voltage impulse is produced by an electrode 25 connected to active core 1 and fed by means of cables 8.
- optoelectronic method: A laser beam impulse of high potency, for example l MW, is engraved on the core and provokes a shock wave and temperature stress which, in turn, cause a sudden structural deformation which then activates the fusion process.
- Radio-frequency method: An impulse of radiofrequency is applied to the active core having a frequency which corresponds either to the resonance frequency of the spins of the hydrogen isotopes or to the plasma frequency of the free electrons of the crystal lattice.
- Ultrasonic vibration method: The active core is contained in a resonant cavity. An energy impulse of ultrasonic vibrations is applied to the active core, having an intensity and duration (for example 10^{-1} seconds) sufficient to provoke the reaction of fusion.

In cases in which the material forming the active core is a type, such as a crystal, which subject to the piezoelectric effect, the startup step can be activated by means of a method with inverse piezoelectric effect, sending to the ends of the metallic core alternate voltage impulses with a frequency equal to that of the mechanic resonance of the core with peak values (for example greater than 5kV) sufficient to provoke a structural deformation which then activates the process of fusion. The embodiment of figure 2 is also designed for this type of startup, in which the alternate voltage impulse is produced by electrode 25 connected to active core 1 and fed through cables 8.

If, finally, the material forming the active core is of a ferromagnetic type, the startup step can be activated by means of a magnetostrictive method which consists in the production, along the metallic core, of a magnetic field with peak values higher than the intensity of magnetic saturation and a rise time lower than 10^{-l} seconds. This type of startup can be carried out both with the generator of figure 1 and that of figure 2 by applying an electromagnetic impulse through winding 9.

4) <u>Heat exchange step</u>

Subsequent to the startup, the reaction is maintained in stationary conditions by exchanging heat by means of a thermal carrier fluid made to circulate in the tube nest 5 crossing the generation chamber of figure 1 or through jacket 15 of figure 2. The removal of heat must not exceed a level where it makes the temperature of the active core fall below Debye's constant, in which case a slow shutdown of the reaction would occur.

With regard to the thermal power which can be obtained, the dimensions and form of the active core play an important role. The active core can have the form of a rod, a lamina, separate and/or tangled wires, free or pressed powder, with or without binder. For example, in generation chamber 2 of figure 1, the active core can be composed, rather than of metal deposited on tubes 5, of a plurality of bars placed in various points of the chamber itself. Alternatively, chamber 2 can be filled with metallic powder.

Clearly, the temperature of core 1 which houses the reaction must remain well under the temperature of transition, above which the lattice looses its crystalline properties and passes to an amorphous state comparable to the vitreous state, and this happens at temperatures which are

New Energy Times Archive

lower than the melting temperature of each metal. In said conditions, in fact, the core would have a response to the oscillations completely different from the behaviour which occurs when the state is crystalline, because the preferential direction on which the wave vectors add up would disappear, with absolutely no possibility of having the above-described reaction.

It is also necessary that the steady functioning temperature to which the core is brought does not approach particular critical temperatures, which are well known for every metal and identifiable from experimentally obtained adsorption diagrams, at which the phenomenon of progressive expulsion of hydrogen from the lattice occurs.

5) Shutdown step

The reaction can be interrupted by arresting the coherent multimodal system of stationary oscillations by simply producing a further vibrational stress which disorganises the system through a positive local production of entropy.

This can, for example, be accomplished by creating a forced vacuum in the generation chamber (absolute pressure less than 0.l millibar) and introducing a jet of gas with positive ΔH of dissociation, for example H_2. Because of the impact with the active surface, the molecules dissociate, and a rapid removal of the lattice's energy occurs, with consequent negative temperature stress. The sudden temperature decrease provokes the disorganisation of the active loci and the shutdown of the nuclear reaction among the hydrogen isotopes.

Alternatively, even leaving the pressure of the gas inside the generation chamber unaltered, it is sufficient to exchange heat cooling the active core up to the point where the temperature of the core itself is brought below Debye's constant. The exchange of heat can, for example, be accomplished by making a fluid at a temperature well under Debye's constant circulate in the tube nest crossing the generation chamber.

In order to provide an even more detailed description of the process according to the present invention, in the following, several practical examples will be set out relative to the application of the abovementioned steps to a metallic active core whose crystal lattice has adsorbed a certain quantity of natural hydrogen.

Example 1

On a 90 mm long bar with a diameter of 5 mm, made of a metallic material (Clunil) formed by isometric crystals having Nickel and Chromium atoms in equal number and alternated, natural hydrogen (D/H = 1/6000) was made to adsorb following the introduction of H_2 at a pressure of 500 mbar and temperature of 220°C with contemporaneous immersion in a magnetic field of 1 Tesla obtained by means of coil 9 wound around the core itself. The generator utilised was the one illustrated in figure 1, with tube nest 5 not coated with metallic layer.

The chamber containing the bar was then gradually brought to a temperature of 20° above Debye's constant, which for Clunil is 192°C.

The startup occurred with the thermoelectric method (by a thermic impulse produced by a current impulse passing through winding 9), with the core inserted at all times in the abovementioned magnetic field and immersed in natural hydrogen at a pressure of 500 millibar. More precisely, the startup was obtained with an impulse intensity of 1000A and a rise time of 30 nanoseconds.

During the course of the reaction, a total net average heat of 1.29 MJ was removed per day, for 58 days, after which the reaction was stopped with a shutdown accomplished by the introduction of H_2, after having temporarily provoked a vacuum (0.1 mbar).

While stopping the reaction, it was observed that during the course of the transient, radioactive isotopes were detected, that it is believed are due to the impact against the neighbouring nuclei of the nuclei of H, D, ^3He which are accelerated by the energy of γ photons (5.5 MeV) produced by the last reactions H+D and not given to the lattice for activating further reactions.

Example 2

On a 200 mm long Nickel bar with a diameter of 3 mm, natural hydrogen (D/H = 1/6000) was made to adsorb with the method of immersion in gaseous environment at the critical temperature of 198°C and contemporaneous application of a magnetic field of 1 Tesla obtained by means of coil 9 wound around the core. The generator used was the one illustrated in figure 2.

The chamber containing the bar was then brought to a temperature of 20° above Debye's constant, which, for Nickel, is 167°C.

The startup occurred with the electric striction method, or, in other words, by applying to the core an electrode through which an impulse of piezoelectric nature was transmitted. More precisely, the startup was obtained with an impulse of at least 10kV and a rise time of 0.1 seconds.

During the reaction, a net total average heat of 4.74 MJ was removed per day, for a period of 31 days, after which, the reaction was stopped with a slow shutdown.

Example 3

On a 90 mm long bar with a diameter of 5 mm, made of AISI 316 steel which has been tempered at 400 °C to eliminate internal stresses, natural hydrogen (D/H = about 1/6000) was made to adsorb with the method of immersion into acid solution and then both immersion in gaseous environment at the absolute pressure of 600 mbar and application of a magnetic field of 1 Tesla obtained by means of coil 9 wound around the core.

The chamber containing the bar was then brought to a above Debye's constant and precisely at 314°C.

The startup was accomplished both with the thermo- electric method and by the thermal stress method due to gaseous recombination.

During the reaction, a net total average heat of 2.64 MJ was removed per day, for a period of 34 days, after which the reaction was stopped with a slow shutdown obtained with cooling below the critical temperature.

Example 4

In a generator like the one illustrated in figure 1, comprising a generation chamber crossed by a tube nest made of copper, on each tube a layer of 2mm of pure Nickel was electroplated, in which natural hydrogen (D/H = about 1/6000) was made to adsorb with the method of immersion in gaseous environment at the absolute pressure of 600 mbar and contemporaneous application of a magnetic field of 1 Tesla obtained by means of a coil wound around the core and immersed in a ceramic matrix.

The chamber containing the strip of tubes was then brought to a temperature of 210°C, 57° above Debye's constant.

The startup was accomplished with the magnetostrictive method, or, in other words, by applying an electromagnetic impulse to the core through winding 9. More precisely, the startup was obtained with an impulse of 0.8 Tesla and rise time of 0.1 seconds.

New Energy Times Archive

During the reaction, by means of thermal carrier fluid crossing the strip of tubes, an net total average heat of 4.9 MJ was exchanged per day, for a period of 6 days, after which, the reaction was stopped with a slow shutdown obtained with cooling below the critical temperature.

The industrial applicability of the generation process and of the generator which actuates said process is, therefore, evident, given that they allow for the production of energy in the form of heat by means of nuclear fusion at limited temperatures, without emission of radioactive or otherwise dangerous particles and for long periods. The materials used both for the active core and for the rest of the generator are inexpensive, thus providing considerable possibilities for economic exploitation.

In cases in which the active core is formed in a material having a higher Debye's constant, such as Silicon (640°K), the temperature at which heat exchange takes place is higher than in the examples described above. Therefore, it is possible to directly exploit the energy acquired by the thermal carrier fluid which crosses the generator, for example to move turbine blades or for similar applications.

The creation of He, as a product of the reaction, is, furthermore, also industrially exploitable given the present high cost of this gas.

CLAIMS

1. Process of energy generation by means of anharmonic stimulated fusion of hydrogen isotopes adsorbed on a metallic core characterized in that it comprises:
- a charging step on said metallic core of a quantity of hydrogen isotopes H and D which are adsorbed in the crystal lattice of said core;
- a heating step in which said core charged with hydrogen isotopes is heated to reach a temperature higher than a threshold temperature corresponding to Debye's constant temperature of the material composing said core;
- a startup step of said core wherein a vibrational stress is produced with a rise time less than 0.1 seconds which activates a nuclear fusion of said hydrogen isotopes.
- a stationary step during which it is exchanged the heat produced by the H+D nuclear fusion reaction which occurs in the core because of a steady keeping of a coherent multimodal system of stationary oscillations.

2. Process according to claim 1, wherein during said heating step said threshold temperature corresponding to Debye's constant must be exceeded by at least a ΔT comprised between several degrees and several tens of degrees, according to the type of material in which said active core is formed.

3. Process according to claim 1, wherein during said charging step, heating steps startup step and stationary step a magnetic field having an intensity greater than 0.1 Tesla is applied to said core.

4. Process according to claim 1, wherein during said charging step said hydrogen isotopes made to adsorb in said core have a ratio of D isotopes to H isotopes greater than 1/80000.

5. Process according to claim 1, wherein during said charging step said hydrogen isotopes made to adsorb on said core have a ratio of D isotopes to H isotopes comprised between 1/10000 and 1/1000.

6. Process according to claim 1, wherein during said charging step said hydrogen isotopes made to adsorb on said core have a ratio of D isotopes to H isotopes of about 1/6000 (natural hydrogen).

7. Process according to claim 1, wherein at the end of said charging step the crowding of the H and D atoms adsorbed on the metal exceeds a numeric ratio of hydrogen isotopes to metal atoms of 0.3.

8. Process according to claim 1, wherein after said stationary step a shutdown step of the fusion reaction is provided by cooling said core below said threshold temperature.

9. Process according to claim 1, wherein after said stationary step a shutdown step of the fusion reaction is provided by means of production of a further vibrational stress which disorganises said coherent multimodal system of stationary oscillations.

10. Process according to claim 9, wherein said shutdown step comprises the introduction after having temporarily provoked a vacuum of a polyatomic gas into a chamber containing said active core causing said further vibrational stress.

11. Process according to claim 1, wherein said startup step occurs by means of a thermal stress obtained by introducing into a chamber containing said core a polyatomic gas with pressure gradient comprised between 1 millibar and 4 bar.

12. Process according to claims 10 and 11, wherein said polyatomic gas comprises H_2, D_2, HD, HT, C_2H_4, NH_3, N_2, O_2 or a mixture of two or more of them.

13. Process according to claim 1, wherein said start up step occurs by mechanic impulse of trosion, traction, or compression applied to the ends of said active core with a rise time lesser than 10^{-1} seconds.

14. Process according to claim 1, wherein said startup step occurs by electric striction obtained by means of an electrical current impulse applied said active core.

15. Process according to claim 1, wherein said startup step occurs by impulses of a laser beam engraved on said core.

16. Process according to claim 1, wherein said startup step occurs by impulses of radiofrequency applied to said active core, having a frequency which corresponds to the resonance-frequency of the spins of said hydrogen isotopes.

17. Process according to claim 1, wherein said startup step occurs by radiofrequency impulses applied to said active cores having a frequency which corresponds to the plasma frequency of the free electrons of the crystal lattice of said core.

18. Process according to claim 1, wherein said startup step occurs by impulses of ultrasonic vibrations applied to said active core, the latter being contained in a resonant cavity.

19. Process according to claim 1, wherein said startup step occurs by inverse piezoelectric effect by sending to the ends of the metallic core alternate voltage impulses with a frequency equal to that of the mechanic resonance of said core.

20. Process according to claim 1, wherein said startup step occurs by magnetostrictive effect, by means of the production, along said metallic core, of a magnetic field with peak values higher than the intensity of magnetic saturation and a rise time lower than 10^{-1} seconds.

21. Process according to claim 1, wherein said charging step occurs by electrolytic means.

22. Process according to claim 1, wherein said charging step occurs by

New Energy Times Archive

means of immersion of said core in a gaseous environment containing hydrogen.

23. Process according to claim 1, wherein said charging step occurs by means of immersion of said core in solutions of HCl, HNO_3, H_2SO_4.

24. Process according to claim 1, wherein said charging step occurs by means of immersion of said core in galvanic baths containing NH_3, the metal constituting the core being deposited on a support composed of Cu or ceramic.

25. Energy generator by means of anharmonic stimulated fusion of hydrogen isotopes adsorbed on metal characterised in that it comprises:
- an active metallic core, on which hydrogen isotopes are adsorbed;
- a generation chamber containing said active core;
- heat exchange means placed inside or around said generating chamber and in which a thermal carrier fluid flows;
- means for starting up an anharmonic fusion reaction of said hydrogen isotopes adsorbed on said core.

26. Generator according to claim 25 wherein said active core has the form of a bar inserted in said generation chamber.

27. Generator according to claim 25 wherein said means for starting up said reaction comprises an electric coil immersed in a ceramic matrix and wrapped around a support shell defining said generation chamber.

28. Generator according to claim 27, wherein said generation chamber is crossed by a tube nest extending between two flanges welded to said support shell, said tube nest crossing said flanges and communicating with a prechamber comprising an annular jacket delimited by a cylindrical shell, said tube nest communicating also with
a collection dome connected with means for external heat exchange and a circulation pump of a thermal carrier fluid.

29. Generator according to claim 27 and 28 wherein said metallic active core is electroplated on said tube nest.

30. Generator according to claim 27 to 29 wherein said generation chamber communicates, through axial ducts which cross said dome on one side and said prechamber on the other side, with a gas tank and an air pump suited to feed hydrogen or other gases into said generation chamber creating thermal stress and starting up said reaction.

31. Generator according to claim 25 and 26 wherein said generation chamber is contained in a heating cylinder in which an electric winding is immersed, a Dacket around said cylinder being provided formed by a support shell and a cylindrical shell and allowing for the passage of said thermal carrier fluid, said generation chamber through a dome chamber communicating with a gas tank and with an air pump, said core being in contact with an electrode suited to transmit to it an impulse to startup said reaction.

32. Generator according to claim 25 wherein said core is a metal layer electroplated on a Cu or ceramic support.

33. Generator according to claim 25 wherein said core is a metallic powder present in said generation chamber.

34. Generator according to claim 25 wherein said means for starting up said reaction comprises a piezoelectric electrode fixed to said core.

DOCUMENTS CONSIDERED TO BE RELEVANT [TO PATENT]:
[Bracketed Numbers Are Claims to Which the Document is Relevant]

• WO, A, 93 05516 (SOUTHERN CALIFORNIA EDISON CO; WAISMAN JOSEPH L (US)) 18 March 1993.
see page 3, line 4 - line 15
see page 5, line 4 - line 34
see page 6, line 30 - page 7, line 21
see page 17, line 30 - page 18, line 23
see page 20, line 32 - page 21, line 11
see page 23, line 24 - page 24, line 16
see figures 4-6A
[1,7,8,21,22,25,26,28,30,33]

• FUSION TECHNOLOGY, MARCH 1991, USA, vol 19, no. 2, March 1991 ISSN 0272-3921, pages 369-370, FANG P H 'Deuterium fusion through nonequilibrium induction'
see the whole document
[1,18]

• WO, A, 90 13128 (EPRI) 1 November 1990
see page 16, line 24 - page 17, line 12
see claims 13, 16, 19
[3,20]

• WO, A, 90 13125 (UNIV BRIGHAM YOUNG) 1 November 1990
see page 15, line 35 page 16, line 13
[13]

• WO, A, 90 14669 (AB TEKNISK UTVECKLING EHR) 29 November 1990
see page 3, line 9 - page 4, line 17
[14]

• FUSION TECHNOLOGY, vol. 17, no. 1, January 1990 LA GRANGE PARK, ILL., US, pages 206-208, XP 000084739 STEINERT C 'LASER-INDUCED "SEMICOLD" FUSION'
see the whole document
[15]

• WO, A, 90 13124 (BROKEN HILL PTY CO LTD) 1 November 1990
see the whole document
[16,17,27]

• PATENT ABSTRACTS OF JAPAN vol. 015 no. 047 (P-1162), 5 February 1991 & JP, A, 02 281185 (YASUYUKI SUGANO) 16 November 1990,
see abstract
[18,19,34]

• HIGH TEMPERATURES - HIGH PRESSURES, 1976, UK, vol. 8,no. 3, 1976 ISSN 0018-1544, pages 247-254, HOCH M ET AL 'Enthalpy of solid and liquid metal halides'
see abstract
[1]

• DE, A, 39 13 503 (NMI NATURWISSENSCHAFTL U MEDIZ) 31 October 1990
see the whole document
[1,2]

• WO, A, 90 14670 (EPRI) 29 November 1990
see page 7, line 34 - page 10, line 22
[15,18]

• NUOVO CIMENTO D, JUNE 1989, ITALY, vol. 11D, ser.1, no. 6, ISSN 0392-6737, pages 927-932,
VASELLI M ET AL 'Screening effect of impurities in metals: a possible explanation of the process of cold nuclear fusion'
see abstract
see page 932, paragraph 1-2
[1,25]

• ACTA CRYSTALLOGRAPHICA, SECTION A (FOUNDATIONS OF CRYSTALLOGRAPHY), 1 MARCH .7 1992, DENMARK, vol. A48, pt.2, ISSN 0108-7673, pages 80-98,
KUHS W F 'Generalized atomic displacements in crystallographic structure analysis'
see abstract
[1]

• JOURNAL OF PHYSICS F (METAL PHYSICS), MAY 1987, UK, vol. 17,no. 5, ISSN 03054608, pages 1051-1064,
ROY S K ET AL 'Dynamical properties of /sup 57/Fe impurities in different metallic solids from anharmonic recoilless fractions'
see abstract [1]

New Energy Times Archive

Transcript of a talk given by Dr. Edmund Storms at the Fifth International Conference on Cold Fusion (ICCF5) April 9-13, 1995, in Monte Carlo, Monaco

Introduction

by Jed Rothwell

Edmund Storms was the keynote speaker at ICCF5, leading off the conference with a comprehensive review of the field. His talk was based upon his upcoming paper *Critical Review of the 'Cold Fusion' Effect*.

Storms is one of leading lights in cold fusion. Not only is he one of the best experimentalists, but he has written some of the best surveys of the field. He is an articulate spokesman for the field. He appeared in one of the BBC/CBC television documentaries on cold fusion and he has been interviewed on National Public Radio. News of his successful excess heat experiment was published in *The Wall Street Journal*. One of his outstanding virtues is that he pays close attention to experimental results, both his own and other people's. You would think that all scientists pay close attention to results, since they all pay lip service to that customer, but unfortunately many do not. Both critics and CF scientists tend to ignore data that does not fit their pet theories, and many are so tightly focussed on their own work that they know very little about other people's results. They do not see the big picture. They cannot muster salient facts from different experiments to evaluate a claim, a hypothesis, or a theory. Storms is one of the few people I know who has the facts at his fingertips. For example, recently I asked him about tritium production and excess heat. Two different theories, from Takahashi and from Bush, both postulate that tritium is produced in a partially loaded lattice. It is a precursor to the excess heat effect, occurring at some loading level just below 85%, which is the critical onset level for heat production. I asked Storms whether he thought the data supports this idea. Without hesitation, he cited experiments and pointed out two critical facts that demolish the idea:

"Loading is always uneven. All cathodes have different spots loaded at different levels. An active cathode will have some spots above the critical onset, and some below it. Loading can vary at different areas on the surface, and it always varies across the gradient; the deeper into the cathode you go, the less hydrogen there is."

"In some experiments tritium was constantly monitored and excess heat was observed. If this hypothesis was correct, there should have been a burst of tritium before the heat began, but this was not observed. Many cathodes that produced heat did not produce significant level of tritium at any time during the run."

These are not profound observations. To the contrary, they are so obvious that when I heard them, I felt a little foolish for asking the question. I should have thought of point #1, and with a little digging I could have found examples of experiments that illustrate point # 2, including work performed by Carol Talcott-Storms. As far as I know, neither Takahashi or Bush has considered these objections, and they should have. Since the data appears to rule out the partial loading hypothesis, I asked Storms what 'special condition of matter' he thinks is required to create tritium, and why it is correlated with heat. He thinks the two are independent phenomena. He favors the idea put forth by Bockris that tritium is caused by surface structures, like dendrites.

Storms is one of the few people I have heard who can lecture coherently without notes. His comments are lively, often humorous, and always to the point. He is the only speaker I know who can hold a jet-lagged audience in rapt attention at 9:00 a.m. on the first morning of a physics conference. What follows is a transcription of his forty-minute lecture, which he delivered off-the-cuff without notes. With a little editing (by Storms and by me) it makes a coherent, organized essay, ready for publication. On the other hand this lecture is more lively than a typical journal paper. A speaker can let himself go and say what is on his mind.

Storms looks at the big picture. He discusses his opinions, he says what he thinks cold fusion scientists should do next. He sticks his neck out and predicts what kind of theoretical work may be fruitful, and what kind should be "trimmed back." He touches upon topics like the potential for technology and the attitudes of the skeptics who oppose cold fusion. He discusses the narrow, technical aspects of CF, and then he shows how they may affect broader issues of science, technology, and society. This broad discussion is not appropriate for a *Physical Review B* article. It is even a little too speculative for the pages of *Technology Review*, where Storms published a less technical review of the field. But it is just right for this magazine.

Storms is one of the few mainstream cold fusion scientists who does not hesitate to investigate and talk about some the extreme claims that most other scientists would avoid. He talked about nickel-light water cold fusion and ultrasound-activation long before others became comfortable with them. It is odd that cold fusion researchers, who are themselves often branded heretics, often draw the line just outside their own work, refusing to consider claims that are slightly more unconventional than their own. Storms talks about research that even the heretics find heretical. He even mentions Kervran's and Komaki's theories that cold fusion occurs in biological systems. He discusses the evidence for excess heat from normal hydrogen in palladium, which makes many people nervous because it appears to contradict one of the few firmly established rules in cold fusion: only heavy water works with palladium, whereas ordinary water will work with nickel. Storms does not necessarily believe these ultra-heretical ideas, but he does enumerate them, and he takes them seriously. He sometimes calls himself a "nonskeptic" in his Critical Review:

"A skeptic believes the claimed phenomenon is not real, requiring only sufficient cleverness to reveal this fact. . . . A nonskeptic believes some of the reported observations might be false but, because there is little experience and no accepted explanation, does not want to reject a potential truth just because it conflicts with conventional thinking. Therefore, a broad benefit-of-doubt is used during this early stage. . . . I am fully aware that claims in conflict with conventional theory will be rejected out of hand by some people, sometimes along with the messenger. Nevertheless, the full range of observation has been described here for the benefit of more open minded readers. Because these observations run the full range from being basically correct to being only suggestive, their inclusion should not be considered an endorsement."

New Energy Times Archive

[INAUDIBLE SECTIONS IN ELLIPSIS.]

by Edmund Storms

In the beginning three miracles were required to explain what was being observed in the cold fusion phenomena. Scientists have a difficult time believing in even one miracle. As a result, most people look upon the claims with some disdain. But a number of us who still believe in miracles stayed in the field and continued to work. Now a critical mass of data is available to us which, I think, makes the case very well for cold fusion. It shows the way to reproduce many of the effects and it shows patterns of behavior that can only be produced by a real phenomenon. Explanations are popping up like flowers after a heavy rain. I will try to address some of these aspects. We now have a fourth miracle the skeptics have to deal with— the resurrection of cold fusion.

Six years ago professors Pons and Fleischmann planted a seed. This has grown into a rather interesting plant as you can see in the figure. Please excuse the lack of leaves on this

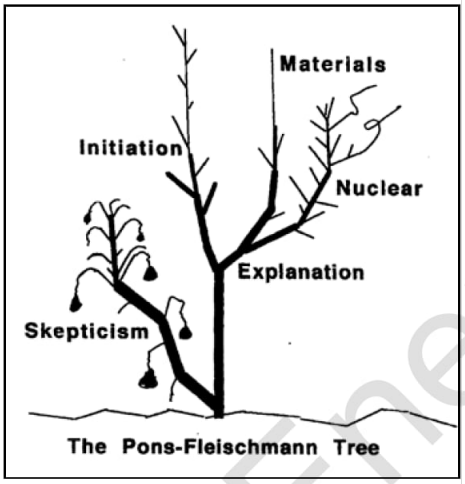

The Pons-Fleischmann Tree

plant, they have not quite come out yet. Nevertheless, the plant is growing very nicely. The main stem, which I call initiation, it is quite healthy. There are now ten different ways of generating excess energy, maybe a couple more for generating other nuclear products. The number of observed nuclear products is increasing, and the basic methods for initiating the effect are expanding. This is the aspect of the field that I will talk about today.

Coming off the trunk is a theory branch, with two subbranches. The nuclear subbranch , addresses the problem of overcoming the coulomb barrier, and also tries to explain what nuclear products are produced. This branch is in severe need of trimming. Many, many theories are now being generated. Most pick and choose the data in order to support the theory rather than the other way around. Some of them have very interesting histories but only a few are useful. Next is the materials sub-branch. This addresses how the nuclear-active state is created in which these reactions can occur. It also addresses how the energy from the nuclear reaction is coupled to the lattice. This branch needs much more attention. Once we know how to modify material to create the nuclear-active state so that the effect can be reproduced at high levels, the nuclear reaction, whatever it is, will then occur automatically without any further effort on our part. It is interesting that since a variety of nuclear reactions have been seen, several different nuclear-active states must be present. This observation gives another challenge to theoreticians that has not been suitably addressed.

Growing off as a sucker, is what I call skepticism. This branch has born bitter fruit and needs to be cut off as quickly as possible in order for energy to go into more productive aspects of growth. To eliminate this branch, we need to understand a little better how the skeptics think. So I have drawn an illustration of some typical skeptics observing a flying pig. I might point out that any relationship to people living or dead is purely coincidental.

JH [*Ed.-John Huizenga*] says "pigs can't fly, because theory proves they have no wings." That is the universal view of most skeptics. It will only be changed when a sufficient number of pigs are captured, and held in cages so that these gentlemen can observe them. Or perhaps when sufficient pig manure is found on rooftops.

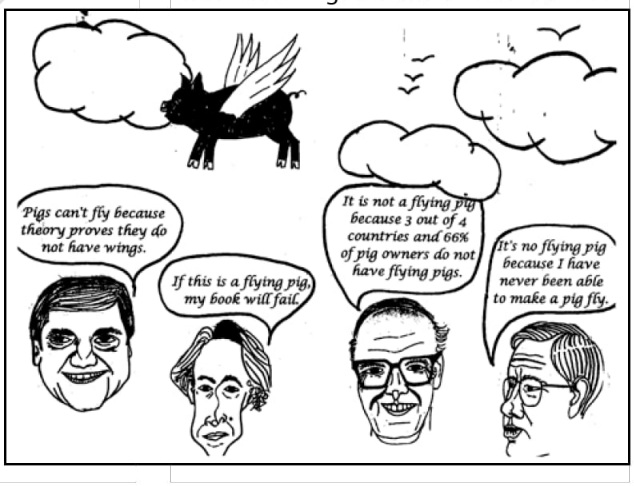

Next to him, SJ [*Ed.-Steve Jones*] says "it's no flying pig because I have never been able to make a pig fly." We can all sympathize with this viewpoint. We all have had our difficulties reproducing the effect. As various successful techniques for initiating the effect become available, I think this attitude will change rapidly. And indeed, a paper

Electric Spacecraft Journal Network

Keeping you informed about independent research.....

The ESJ Network assists individual research efforts, facilitates cooperation among experimenters and provides an open forum for the exchange of information an ideas. The Network provides a medium for direct interaction among associates. We urge individuals doing independent research to network.

The Network welcomes those engaged in experiments, analysis, conceptual thinking, and investigative research, who are willing to interact with others. Inquiries to: 704-683-0313 or 704-683-1280, Fax: 704-683-3511

Subscriptions to the quarterly *Electric Spacecraft Journal*, 73 Sunlight Drive, Leicester, NC 28748 USA.
Annual Subscription rates: U.S.A. $24; Canada and Mexico $29; Overseas $39.

New Energy Times Archive

will be published in *Fusion Technology* this year ("How to Produce the Pons-Fleischmann Effect") which gives a recipe. As people use the known techniques, I expect this viewpoint to gradually die away.

DM [*Ed.-Douglas Morrison*] says "it is not a flying pig because 3 out of 4 countries and 66% of pig owners do not have flying pigs." This viewpoint is slowly dying away as more pigs take to the air.

And finally, GT [*Ed.-Gary Taubes*] says "if this is a flying pig, my book will make me look silly." Many people have staked their reputations, funding, industry and so forth on this negative position. This is the lament that results when a wrong choice is made. People who were selling whale oil had this attitude when kerosene became available. People who had kerosene stock said the same thing when lightbulbs were invented. It is a never ending process. It is just too bad that it has to be so painful for the people involved. If those of us who believe in the phenomenon had been wrong, we would be in a similar position.

Well, let's take a look at this airborne Wiener schnitzel (A delicious breaded pork cutlet), and see what it has to tell us. The next slide lists the major types of observation.

INDICATORS OF THE "Cold Fusion" EFFECT

Estimated rate of nuclear reaction shown

1. **Excess energy (10^{10} - 10^{14}/sec)**
2. **Helium (0.5 to 1.0 x energy)**
3. **Tritium (<10^8/sec)**
4. **Nonradioactive isotopes**
5. **Charged particles including strange particles**
6. **Prompt and delayed gamma**
7. **Neutron (10- 100/sec excluding bursts)**

SLIDE (List of types of evidence supporting CF)

The major aspect of cold fusion in terms of its technological importance and the implied nuclear rate is excess energy. This energy implies 10^{10} to 10^{14} nuclear reactions per second. The only nuclear product that has any proportional relationship to that huge rate is helium. Helium can account for the heat perhaps within a factor of two. People say, "well, you are not getting gamma emissions, so therefore you are not getting helium." I prefer to say we are getting helium, we just don't have an explanation.

Tritium is the next most important nuclear product with a rate of less than 10^8 events per second (atoms per second being made). The tritium production rate is not sufficient to account for the heat, but it is far greater than the amount that can be explained by any reasonable theory. People say, "you are not getting 14 MeV neutrons, so therefore you do not have tritium." I prefer to say that we have tritium, but we don't have an explanation. I believe the same explanation will apply to the production of both helium and tritium although the location on the cathode and chemical environment in which these two products are created may be different.

Increasingly people are finding evidence for the production of nonradioactive isotopes. This ups the ante. Before we were just thinking in terms of fusing two hydrogen isotopes with their nuclear charge of one. Now we are into the big time. Charged particles, including some strange particles have been observed. Again, some of these charged particles may result from fusion, some not. But their existence shows that some of the nuclear reactions can occur without coupling their energy to the lattice. That coupling was one of the required miracles to explain the lack of certain radiation. If we get charged particles with the energy we are seeing, a large amount of energy is not going into the lattice. So we have a bit of a problem. I'll talk about this a little more later.

Prompt and delayed gamma, from radioactive isotopes having a short half-life are seen. Again, we are dealing with the production of very heavy elements with a high coulomb barrier.

Finally we come to neutrons. Neutrons occupy a special position because conventional theory predicts a great number should be made, So people looked for neutrons with great vigor. Most physicists have a neutron detector laying around somewhere that they put to use. Probably 300 papers are available that explain how the authors either failed to see neutrons or saw just a few. It is clear that neutrons are not part of the cold fusion effect, to any great extent. This has a good side and a bad side. The good side is that when this effect becomes economical and we are starting to make a lot of energy, we will not have to defend ourselves against a lot of neutrons. That's very desirable. On the other hand, the bad side is that it is very difficult to convince anybody that anything is actually happening unless neutrons come out. I would like to point out some characteristics of the neutrons that are seen. There are two kinds. Some come out at rates between 10 to 100 per second. Others are produced in bursts. This suggests to me that two different sources exist, two different production mechanisms. Perhaps one of them is fracto- fusion. Another interesting aspect is found. When you try to relate the neutrons to excess energy, you find a tremendous disparity between the rates. For example, if you took the time of my talk as the neutron emission rate, and the time between now and the age of the dinosaurs as being the nuclear reaction rate required to give the observed excess energy, you would have the right correspondence. So you see neutrons really don't have much relationship to excess energy production. It's high time for theoreticians to acknowledge this fact.

IDEAS:

- Buy bulk copies of *INFINITE ENERGY*.
- Give gift subscriptions to libraries and friends.
- Advertise in *INFINITE ENERGY*.
- Spread the message!

We are due for a name change. It's no longer just fusion. A number of names have been suggested:

"Cold Fusion" aka

Chemically Assisted Nuclear Reactions (CANR)
Lattice Induced Nuclear Chemistry (LINC)
Lattice Assisted Nuclear Transformations (LANT)
Nuclear Energy in an Atomic Lattice (NEAL)
Catalyzed Nuclear Reactions (CNR)
Solid-State Nuclear Reactions (SSNR)
Pathological Science (PS)

Unfortunately, none of them have really captured people's attention, or have become very popular. The final one: Pathological science, which is the favorite of skeptics, no longer really applies. The effect is now growing instead of diminishing, it's becoming more reproducible rather than less, and more and more people have seen it. Even when the apparatus is improved, the effect improves rather than fades away.

Let's concentrate on the production

New Energy Times Archive

METHODS CLAIMED TO PRODUCE EXCESS ENERGY

Gas Reaction

Reaction between finely divided Pd and D_2. (Arata and Zhang, Kinki Univ. and Osaka Univ., Japan)

Reaction between Pd coated with MnO and Au and D_2. (Yamaguchi and Nishioka, NTT, Japan)

Reactions between special Ni and H_2. (Piantelli et al, Bologna INFN, Cagliari INFN, and Siena IMO, Italy)

Electrolytic

Electrolysis of D_2O-based electrolyte with a Pd cathode. (Pons-Fleischmann Effect)

Electrolysis of H_2O-based electrolyte with a Ni cathode. (Mills Effect)

Electrolysis of KCl-LiCl, D electrolyte with a Pd anode. (Liaw et al., Univ. Hawaii, US)

Current passed through $Sr(CeNbY)O_3$ in D_2, (Mizuno et al., Hokkaido Univ., Japan)

Implantation

Gas discharge using Pd electrodes in hydrogen. (Dufour et al. SRSA/CNAM, France)

Gas discharge using Pd electrodes in deuterium. (Karabut and Kucherov, Luch, Russian Federation)

Bubble Collapse

Reaction involving D_2O and various metals using an acoustic field. (Stringham and George, E-Quest Sciences, US)

Reaction in H_2O using mechanical generation method. (Griggs, HydroDynamics, US)

of excess energy and examine the four major methods of initiating energy production in the various environments.

We will start with the gas reaction. Deuterium, at some pressure generally above atmospheric, is caused to react with palladium, or hydrogen is reacted with nickel. This experience is very important because it had been thought that only the high activities produced by electrolytic action or other vigorous techniques would work, Yet heat can apparently be generated when the hydrogen isotope is placed in the material very gently. What is unique about these materials that makes possible the high deuterium loading required to initiate the nuclear-active state? That question needs to be answered. I have answers but I don't want to go into them right now because I want to move on. I'm sure you are amazed to notice that there is evidence for heat being produced in both the deuterium system and the hydrogen system using this kind of method. Clearly, several different nuclear reactions are involved.

The electrolytic technique is next on the list. This method is the classic Pons-Fleischmann effect where D_2O is electrolyzed using a palladium cathode. That effect has the largest data base and the most robust data compared to the other methods. We will concentrate more on this method a little later.

The Mills effect falls in this category but, in this case, normal water is electrolyzed with a nickel cathode. This has a fairly reasonable data base although not as large as the PF method.

A few examples are reported using electrolysis using a molten salt. This method is important because it demonstrates that deuterium can be loaded into the palladium to achieve a nuclear-active state at very high temperatures. Even the D_2O system has been successful at temperatures up to at least 100 degrees. Consequently the nuclear-active state appears to be fairly stable. That's important from a technological view point.

We also have an example from Mizuno which can be considered as a solid electrolyte rather than liquid. Higher temperatures are involved as well as an entirely different chemical environment than available in palladium or in nickel.

The third method involves implantation and gas discharge. Gas is ionized by an applied voltage and the ions are caused to rain down upon the palladium electrode. The ambient pressures are fairly low so that high loading is achieved using the ion bombardment process. This method has produced excess heat when Pd is used with normal hydrogen as well as with deuterium. This technique has generated particularly large amounts of excess energy and produced tritium as well as a variety of other nuclear products.

Finally we come to the newer member of the group—bubble collapse. The loading reaction occurs when a bubble, created by acoustic conditions, collapses against a metal. In this case, the bubble, which contains a mixture of deuterium and oxygen resulting from disassociated water, is injected into the metal. Eventually a nuclear-active state is created when sufficient deuterium has accumulated. Significant data show heat associated with helium production.

The Griggs method is similar. In this case, a different technique is used to generate acoustic bubbles and normal water is used. I would like to assume that the result falls into the category of cold fusion. However, we do not have any evidence that a nuclear reaction is going on, only that excess heat is produced. Other methods for producing bubbles have also been claimed to produce excess energy using ordinary water. It is clear that more work has to be done to define what is going on here. If the process does fall into the category of cold fusion, it gives a fairly robust example of large energy production.

Lets look a little more at the Pons-Fleischmann effect, since that's where the main database lies. The power range that has been reported in the literature runs from 15 milliwatts to 130 watts. All of those values are well in excess of the errors and sensitivities of the respective calorimeters. The energy range runs from 0.06 to 200 MJ which, of course, is determined by how long the experiment lasted and the power production rate. I have looked at the literature and picked out some representations of the effect having data taken while using more than usual care. For the sake of simplicity, they are only summarized here.

They are described more completely in a recent review I have written that is available upon request. Twelve examples of closed systems are available. This is important because early critiques claimed that the excess

SUMMARY OF RESULTS FOR PONS-FLEISCHMANN EFFECT

Excess Values

Power Range: 0.015 to 130 Watt
Energy Range: 0.06 to 200 MJ

Number of Cells of the following type:

Closed: 12
Checked for recombination: 7
Used blank: 20
Stirred or not needed: 13
Dual calibration: 6

New Energy Times Archive

energy was being produced by uncertain calculations of recombination between the deuterium and oxygen. A closed system, or a system for which the amount of recombination is determined, eliminates this uncertainty. At least 19 studies have been done in ways that prevent this error from being an explanation.

Skeptics complain, "you don't know how good your calorimeter is unless you use a blank." As a result everyone now uses a blank, that is a study of a dead electrode. In this way, the characteristics of the calorimeter, in the absence of excess heat, can be understood. Early on, the possibility was raised that temperature gradients within the calorimeter could cause errors. So people started stirring, or they used calorimeters that did not require stirring, such as flow calorimeters. Thirteen examples of this method in which excess energy was produced are reported.

And finally, a few people suggested that calorimetric results are only good provided you first look at some known chemical reaction to make sure the calorimeter is working properly. This method is what I call dual calibration. Here joule heating with an internal resistor is used as one means of measuring the characteristics. The result is compared to a calibration using electrolysis as the known chemical reaction. Six studies have used dual calibration. Agreement between the two calibration methods shows that no excess energy is produced by the electrolysis process when a "dead" electrode is used.

Critics should understand that many of the studies do not involve the measurement of an absolute amount of energy. Most studies determine energy production during the initial interval during which the cathode is nonactive. This is compared to the increased energy that results when the cathode becomes active. Such studies only require the calorimeter to be stable, a much easier requirement than to achieve absolute accuracy. This fact eliminates several theories and proposed errors.

All of these studies have produced excess energy. At this point I believe it is really not reasonable or rational to believe that the principle of excess heat production results from error. Only the magnitude of the effect might be wrong.

In addition to being able to defend the heat in an absolute sense, another criterion of reality exists when patterns are found between various data sets. These show that you are touching the same elephant. We now have the ability to see such patterns.

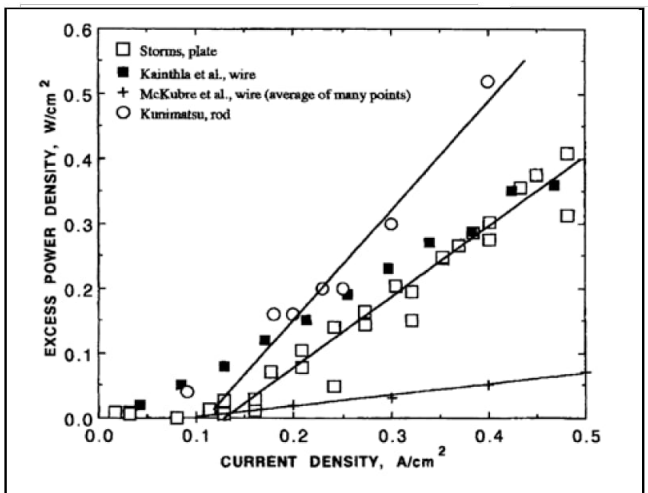

Effect of current density on excess power production

The first involves the current density and excess power. A value of current density exists below which there is no excess power. Above this critical onset, the excess power increases in proportion to the applied current. Although these data sets don't have the same slope, for various reasons I will explain, they nevertheless show similar behavior and a similar onset. Although the onset value is variable, many people find it between 100 and 200 milliamps per centimeter squared. Others have seen it as high as 400 milliamps per centimeter squared. The need to exceed this critical onset is one of the requirements that was not understood early in the field and led to irreproducibility. The reason for the onset, and the relationship seen in the slide, has to do with the need to achieve a critical composition in order to form a nuclear-active state. The slope is sensitive to the changing temperature produce by the current and the nature of the palladium surface. In the next slide you can see the relationship between excess power and the average composition of the metal. It is very important to understand that all of these compositions are average values. They are not the composition of the nuclear-active state. In some cases the composition was measured by measuring the resistance of the sample. In other cases, the pressure change or the sample weight was measured. Each of these methods gives slightly different values.

Other studies are available showing this same effect, seen in the next slide. A number of palladium pieces all show the same critical onset value. The value is somewhat bigger than the one found by McKubre's group because a different method of measuring the composition was used. Nevertheless, I think any reasonable person would admit we are looking at the same phenomenon in the two studies.

What are the critical conditions necessary to make a Pons Fleischmann cell work? Some of them are known, but not all. The nature of the palladium is the single most important variable. Palladium that is bought off the shelf has a chance of working between one chance in ten to one chance in twenty. We now understand to a large extent why this variability is present. If the right palladium is used by employing a pretest, it is possible to raise the odds considerably. Sufficient current density is also required, as we just saw. Certain impurities must be present on the surface. Aluminum or silicon were found by McKubre to be beneficial in retaining the deuterium concentration. Some impurities within the palladium, like silver, help retain its integrity while others, like carbon, are not helpful in this respect.

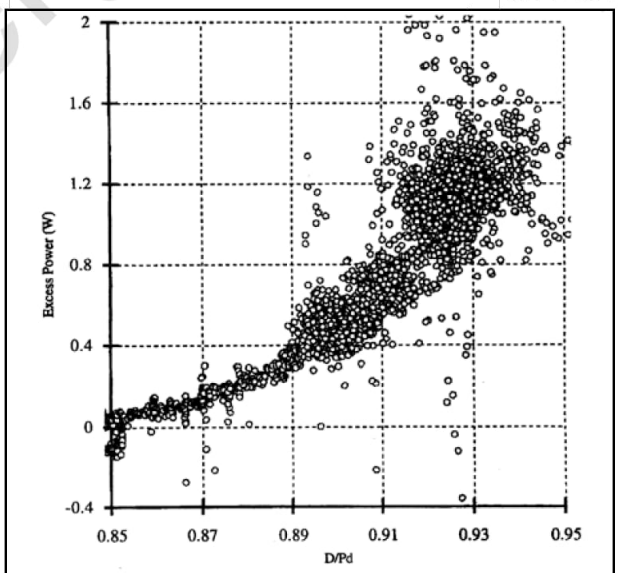

Effect of average deuterium composition on power production in palladium. Closed cell, D/Pd determined from resistance. (McKubre et al. SRI)

New Energy Times Archive

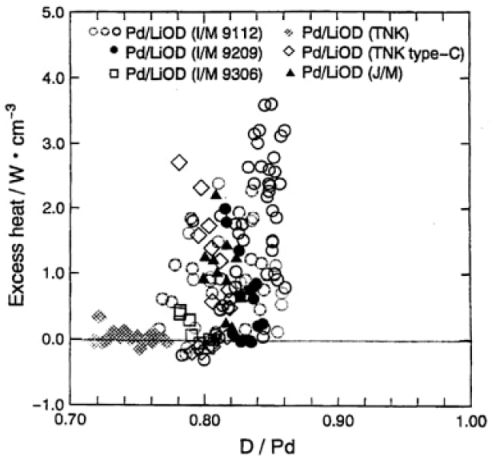

Effect of average deuterium composition on power production . Closed cell, D/Pd measured by pressure change. (Hasegawa et al. IMRA Japan Co.)

There is some indication that boron might be desirable on the surface. Certain impurities must be absent. Any impurity on the surface that inhibits the flow of deuterium across the surface into the interior will reduced the ultimate composition. I would like to empathize that these requirements were not appreciated in the early days, Consequently, many studies failed because certain impurities were present that we now know to be disastrous.

The absence of normal water in the electrolyte is important. A 5% concentration of normal water in heavy water is concentrated to give perhaps 20% in the palladium. This amplification can quickly stop energy production. It doesn't take much carelessness to contaminate heavy water with a little normal water. Letting the heavy water sit out in the atmosphere is very effective. This effect provides another reason why some of the early studies failed.

Absence of uniform current density

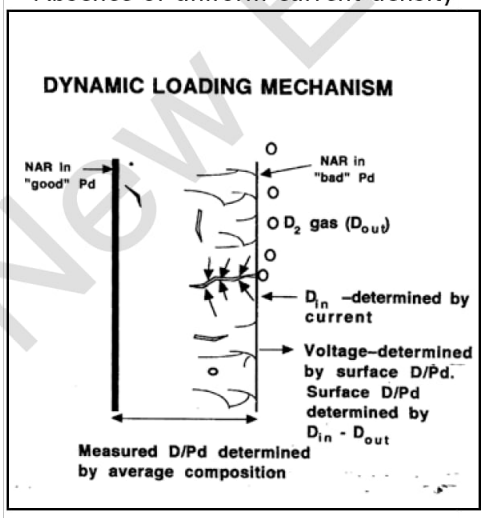

is another negative factor. The piece has to be bathed in the hydrogen so that there are no regions where it can leak out.

And then finally, there are several initiation methods, some of which are quite effective. If you use the right procedures, and have just a modicum of luck, you will have a very high probability for success.

Let's look at what is going on inside the palladium so we can understand why these requirements are so important. We are working with the leaky bucket problem. Most palladium forms cracks when it loads. These cracks act as escape routes for the loss deuterium. The incoming atom flux has to be large enough to offset the out going flux in order to achieve high loading. Bad palladium, shown on the right side of the slide, has lots of these cracks. Therefore it is almost impossible to put the deuterium into the metal fast enough, at high enough currents, to offset the loss. The applied voltage is not the driving force in this process. The driving force is the applied current. This loading current results in concentration gradients that cause the surface composition to be higher than the interior composition. This surface composition results from a competition between the loss of deuterium, determined partly by the cracks, and the uptake of deuterium, determined mostly by the current. It is a dynamic process. Hence, the high surface composition will determine where the nuclear-active state forms first. Good palladium, shown on the left side, has few cracks. Even though the internal composition gradient will create the highest composition at the surface, the gradient will be less steep. Gradually more of the surface and more of the volume will achieve a composition of sufficient magnitude to produce the nuclear-active state. Consequently, such material will produce more heat than "bad" material. We also have the prospect of localized hydrogen concentrations around defects and dislocations which appear to be very important for improving the overall deuterium content. Other factors besides the D/Pd ratio will, no doubt, determine whether the nuclear-active state forms and where, exactly, it is located.

I would like to say a little bit about this nuclear-active state. First of all, it has to be able to transfer a lot of energy into the lattice. This means it must have some really strange electron characteristics. Those electron characteristics will manifest themselves as changes in mechanical and chemical properties. Because the atoms must be held together by very strong electron states, I would expect this material to be very, very hard. Also the diffusion rate of the deuterium through this material would be much less than through ordinary palladium deuteride. An example of a low diffusion rate is seen when the heavy water is replaced by light water while heat is being produced. When that happens, the heat does not go away immediately. It lasts for hours and hours, much longer than it would take to replace the deuterium with ordinary hydrogen in beta phase palladium deuteride. Also, in the life-after-death experiments when electrolysis stops, the electrode stays hot for some period of time, This behavior suggests that deuterium is retained far longer than would be expected if the active phase were the beta phase deuteride. This active material appears to be something different. Some people have called it the gamma phase. Consequently, theory should not be based on the characteristics of beta palladium deuteride.

Let's talk about helium. Helium production and heat have been measured very carefully by several separate groups. Miles at the Naval Weapons Center, Ben Bush at SRI, and Gozzi in Italy have done some very fine work. The skeptics will say "well, you don't have gamma emission coming off, therefore you don't have helium." Nevertheless, helium certainly has been detected. The skeptics then say, "well, that's just contamination, that's just stuff coming in from the atmosphere." Sure, this source needs to be considered. However, the people who have measured helium also have done blanks and seen nothing. If only one positive value were available, it could be called accidental. But after a while, a collection of values is built up. If each positive value were caused by an accidental leak, I would expect the values to fluctuate over a very wide range. This large scattering does not occur. The data stay within the expected errors. They then say, "well, everybody knows that if helium goes into palladium it never comes out at room temperature. So, the helium found in the gas can not be caused by cold fusion in the palladium." Such information comes from the behavior of helium-3 in palladium as a result of tritium decay. Well, their statement is true, except that several conditions operate that are not present during

New Energy Times Archive

tritium decay. For example, even the helium that results from tritium decay has a slight, maybe 2 to 10 micron, diffusion range. Because the helium producing reaction occurs on or near the surface, some of the helium will come out. Furthermore, a flux of deuterium is constantly moving through this region. We know that a hydrogen flux increases the diffusion rate of many impurities in palladium. It would not seem unreasonable to assume that the diffusion rate of helium would also be increased. We have evidence that the nuclear reaction produces local heating. People see regions where the palladium has melted. That local heating will certainly release some helium. And finally, we have the nature of this

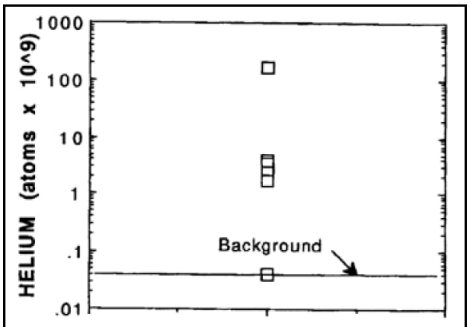

Helium in palladium after being subjected to electrolysis in D_2O (Bockris, et al.,Texas A & M)

nuclear-active state. It is not beta phase palladium hydride, on which the experience with tritium is based. It is the gamma form. We don't know the diffusion rate of helium through this phase. In the face of such ignorance, how can we predict that the helium is trapped?

A number of studies have shown helium in the metal. Not as much as needed to explain the heat, but more than would be present from any reasonable contamination source. Shown inthe next slide are helium results from a sample that Bockris' students studied at Texas A&M while making tritium. I'll show the tritium data later. They found significant helium present over a very wide range of values. Apparently the process was very uniform. Excess energy production was not measured. This isn't the only example. I don't have time to go into all the examples of helium being produced, or appearing in various places where it should not appear. Nevertheless many examples do exist.

Let's talk about tritium. There are six ways I know of to make tritium. It can be made in a Pons-Fleischmann-type electrolytic cell using palladium as well as other metals; in the Mills-type electrolytic cells using nickel; during low voltage discharge involving palladium electrodes in low pressure deuterium; during low voltage discharge in high pressure deuterium using palladium; and after rapid gas release from palladium upon heating. The latter three methods have been used at the Los Alamos National Laboratory by Tom Claytor. Gas loading of titanium with high pressure deuterium, followed by a temperature change also results in tritium production. The variety of chemical environments raises the specter of still another difficult explanation.

I won't go into the details of how tri-

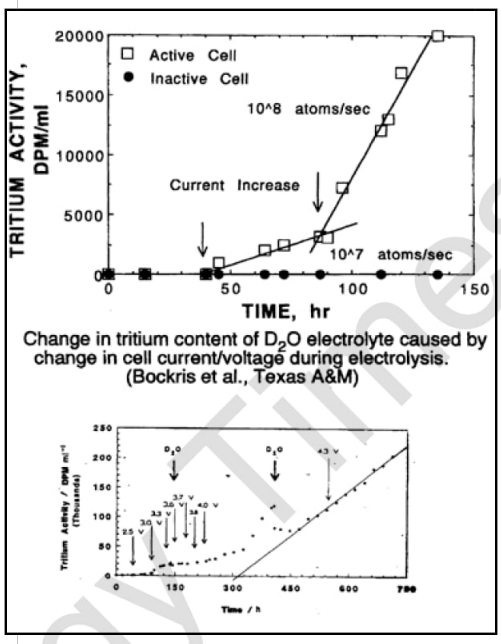

Change in tritium content of D_2O electrolyte caused by change in cell current/voltage during electrolysis. (Bockris et al., Texas A&M)

tium is detected. There are five different methods, all of which have been used with success. One of the complaints skeptics raise is: "commercial palladium can be contaminated with tritium. Therefore the tritium came out of the palladium." There are six different methods of determining tritium in palladium, all of which have shown that commercial palladium does not contain tritium. Let's be realistic, numerous studies have demonstrated that commercial palladium simply does not contain tritium. Just to be on the safe side people have protected themselves in various ways from the skeptics. I'd like to describe two studies from which tritium was obtained. Both have been done in sufficient detail so that it is very difficult to raise a rational objection—truely smoking guns.

This slide shows the Bockris work at Texas A&M. They electrolyzed using an open cell with two cells being operated in series, in the same room, side by side. You can see that the dead cell produced no tritium. However, the other cell, at one point in time, started to produce tritium. Everybody knows that the tritium content of such cells will go up a little bit just because of the separation factor. On the scale used in the slide, that effect is insignificant. You can't even see it. The amount of tritium produced is huge compared to any conceivable error or normal process. At one point, the current was increased and the tritium rate increased. Thereafter, the production rate remained constant. Again the current was increased and the tritium rate again increased and remained constant. At this point the average rate was 10^8 atoms per second. Various events like the addition heavy water, turned off tritium production. Several techniques were able to reestablish production. I defy you to explain how this behavior could result from tritium coming from a contaminated electrode or from the environment. Added to the problem of such an explanation is the fact that parts of electrode were analyzed for tritium before the study and the rest was subjected to a procedure that is known to remove any tritium. Everything that we know about palladium shows that this sample was free of tritium at the start. An explanation blaming the environment also has serious problems. They used an open cell that leaked air. While allowing the gases produced by electrolysis to come out, ordinary water could go in. Because the water content of the cell was measured, we know how fast water from the atmosphere went into the cell. Therefore, we know how fast tritium

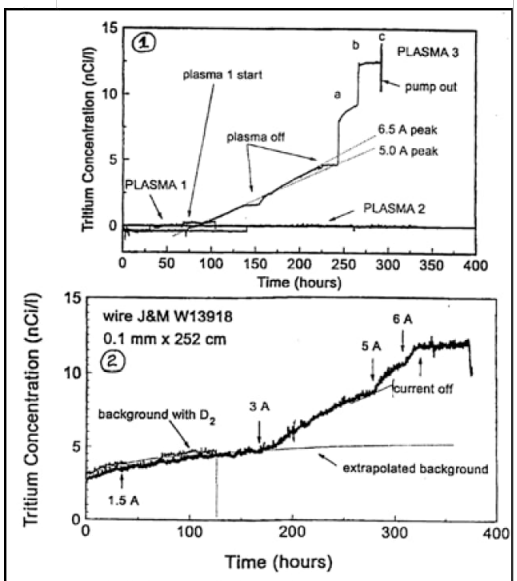

Tritium production using two different methods involving D_2 gas and Pd metal (Claytor et al. LANL)
1. Gas discharge between Pd plate and Pd wire
2. Pd wire heated by current in D_2 Gas

New Energy Times Archive

from the atmosphere would go into the cell. In order to account for the tritium production rate, the room would have to contain about 20 microcuries of tritium per cubic meter of air. The evacuation alarms go off at LANL at that level. So we have to imagine that Texas A&M is highly contaminated, and the contamination changes abruptly when they change the current going into the cell. (Audience laughs, applauds.)

Let's look at other techniques for making tritium. Tom Claytor has explored three different methods for making tritium. These are all done by enveloping the material in gas, in sealed cells. These cells are made of stainless steel and they are certified to be tritium tight, using all of the criteria required at LANL where high levels of tritium are handled, although not in Tom's lab. There is no way that any tritium can leak in from the outside world, even if the apparatus were bathed in the stuff. In the next slide is an example of results after a piece of palladium was loaded with deuterium and then warmed up by a current being passed through the wire. Gas was released during this process, some of it being tritium. Because they use a closed gas loop, they are able to measure the tritium concentration continuously with an ionization gauge. You can see that when the current through the wire reached three amps, hence a certain temperature, the tritium started coming out. When the current was turned off, the tritium stopped coming out. It is clear that this tritium was produced in the palladium because this palladium was analyzed beforehand for tritium. After studying a variety of samples, it is clear that the nature of the palladium, once again, is a determining factor in the production of this nuclear product, just as is the case with heat production.

RECENT IMPORTANT CONTRIBUTIONS

1. Influence of RF fields (Letts)
2. Influence of microcrystals (Arata)
3. Influence of pulsed loading (Celani, Takahashi)
4. Success of thin Pd films (Bush et al.)
5. Production of Strange Particles (Matsumoto)
6. Production of gamma emitting isotopes (Bush et al., Karabut et al., Wolf)
7. Production of X-ray and γ-ray beams during gas discharge (Karabut et al.)
8. Production of tritium in light-water cells (Ramamurthy et al., Natoya)
9. Production of tritium in Pd by various methods. (Claytor et al.)
10. Production of nonradioactive elements (Bush et al., Karabut et al., Natoya)
11. Production of charged particles
12. Biological possibilities (Komaki)

Let's see . . . we are getting near the end. I'll end with this one graph. I have listed here several important contributions. I'm sorry to have left off much good work. There is just too much to put on one slide. I present this list for the sake of argument and to stimulate some discussion.

First on the list is the influence of RF fields. This demonstrates that the nuclear-active state and the resulting nuclear reactions are influenced by energy coming from the outside world. In this case the energy is in the form of radio frequency power of a particular wavelength. That realization is significant and it gives us a diagnostic tool to understand what is going on within the lattice.

The next item is work by Arata using palladium black (very finely divided palladium). This material was loaded with deuterium at moderate pressures and found to produce excess energy. This experience demonstrates that it is not necessary to pump deuterium into palladium at very high activities. Advantage can be taken of the intrinsic properties of palladium itself to get the effect to work.

Next is the effect of pulsed loading. This is a very fine technique for initiating the reaction. It can be as gentle as just changing the current or it can be as vigorous as a 100 volt pulse for a short period of time. Such a pulse essentially drives the deuterium through any barrier that forms on the surface.

The success of thin palladium films is important. These films are only 5 μm thick yet they produce as much heat as observed from a solid piece of the same area. This behavior demonstrates that the nuclear reactions occur very near the surface. It also means that when this effect becomes a technological miracle, we will not have to use an enormous supply of palladium— just a little bit will be needed.

The production of strange particles is surprising. Matsumoto has seen some really truly amazing particles that boggle the mind. As a result, many people ignore what he has done. This observation needs to be addressed, and looked at with some seriousness.

Production of gamma emitting isotopes is becoming more common. It is very difficult to ignore a radioactive material with a short half-life that suddenly appears in a cell. . This is a miracle in its own right that requires an explanation.

People have seen X-ray and gamma-ray beams during gas discharge. This would suggest that the gamma rays are originating in some very mysterious way and that they are being reflected by the atomic lattice, an impossible process in a normal lattice. What mechanism allows such reflections?

Some people see some tritium in light water cells. Skeptics think we are crazy when we talk about deuterium producing tritium. When you talk about normal water producing this product, even people who believe in cold fusion scratch their heads.

Production of non-radioactive elements demonstrates the wide variety of nuclear reactions that apparently can be initiated in these environments. We are not just talking about fusion, we appear to be talking about Alchemy. Will the wonders never stop?

Charged particle production shows that these nuclear reactions can occur without coupling all their energy to the lattice. This means that the mechanism for overcoming the coulomb barrier and the mechanism for coupling the resulting energy to the lattice are separate and independent of one another. That's an important concept.

And the biological possibilities, which ah . . . well, that's an overwhelming imagination stretcher, right there.

Thank you very much.

"There is no reason why a new technology has to develop like fission and fusion on a thirty-year time scale. All it needs in order to go fast is small size of units, simple design, mass production, and a big market.

Freeman Dyson, in *Infinite in All Directions*, 1988

Quoted in Eugene Mallove's *Fire from Ice*, page 302

New Energy Times Archive

Claimed Over-Unity Magnetic Motor Awarded U.S. Patent

318% Mechanical Output/Electric Input

United States Patent Number: 5,436,518
Date of Patent: July 25, 1995

MOTIVE POWER GENERATING DEVICE

Inventor: Teruo Kawai, 4-3-905, Nishikamata 7-chome. Ota-ku. Tokyo, Japan
Assignees: Nihon Riken Co., Ltd.; Teruo Kawai, both of Tokyo, Japan
Appl. No.: 79,120
Filed: Jun. 17, 1993

Editor's Note: *The key, shocking paragraph in this patent is:*

"Pure steel was used as a magnetic material. The magnetic material was 30 mm in thickness and formed to have magnetic teeth of 218 mm diameter and notches of 158 mm diameter. A ferritic magnet was used as a permanent magnet. The magnetic force of the magnet was l,000 gauss. Electric power of 19.55 watts was applied to the electromagnets at 17 volts and 1.15 amperes. Under the above condition, a rotational number of l00 rpm, a torque of 60.52 Kg-cm and an output of 62.16 watt were obtained."

That is 318% output/input. Furthermore, the #1. primary claim of the patent is:

"1. A motive power generating device for transforming magnetic energy into motive power comprising...."

The patent has 16 claims and 19 drawing sheets. We present here only a brief extraction of some parts of this patent and its drawings.—The Editors

ABSTRACT

A motive power generating device comprises a permanent magnet disposed around a rotational output shaft for rotation therewith, the output shaft being mounted on a support member for rotation, a magnetic body disposed in concentric relationship with the permanent magnet for rotation with the rotational output shaft, the magnetic body being subjected to magnetic flux generated by the permanent magnet, a plurality of electromagnets fixedly mounted to the support member in such a manner that they are spaced at predetermined distances around the periphery of the magnetic body, each magnetic circuit

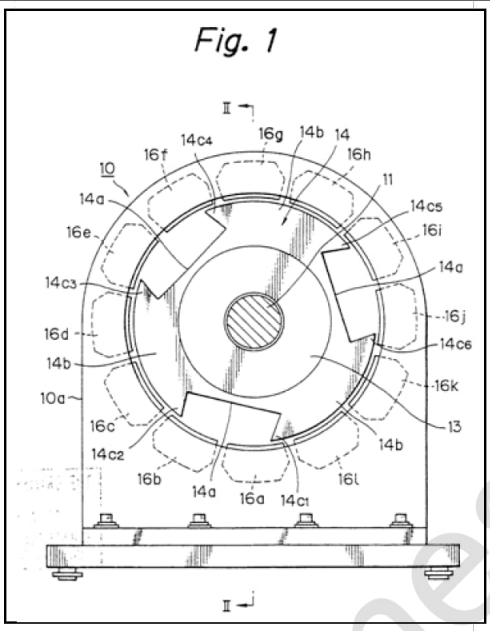

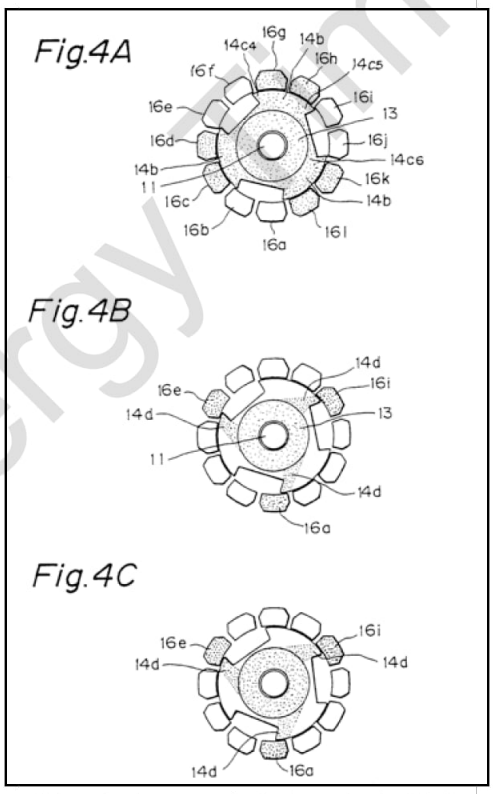

of the electromagnets being adapted to be independent of one another, and excitation changeover means for the electromagnets, the excitation changeover means being adapted to sequentially magnetize one of the electromagnets which is positioned forwardly with regard to a rotational direction of the rotational output shaft, so as to impart to the particular electromagnet a magnetic polarity opposite to that of the

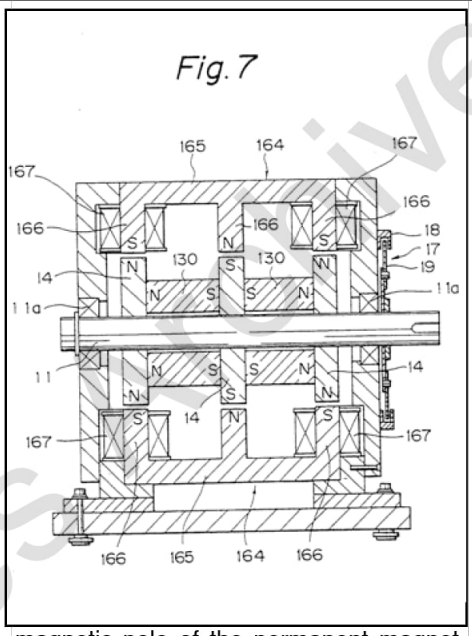

magnetic pole of the permanent magnet, whereby magnetic flux passing through the magnetic body converges in one direction so as to apply a rotational torque to the rotational output shaft. No force opposing movement of a rotor or movable element is generated.

BACKGROUND OF THE INVENTION

This invention relates to a motive power generating device in which electromagnets and a combination of a magnetic material and a permanent magnet are used as a stator and a rotator. respectively. More particularly, the invention relates to a motive power generating device which transforms magnetic energy into operative energy with maximum efficiency utilizing a magnetic force inherent in a permanent magnet as an energy source .

Heretofore, it has been known in the art that a motive power generating device in which electromagnets and a combination of a magnetic material, such as soft steel, and a permanent magnet are used as a stator and a rotator, respectively. Such a device includes, for example, a step motor of a HB (Hybrid) type.....

SUMMARY OF THE INVENTION

Accordingly, it is an object of the invention to provide a motive power generation device in which the occurrence of a force

Continued on page 46

New Energy Times Archive

Letters to Editor (continued from p.7)

couple of hot and cold ones (Cappucino and beer) waiting for our flights, we tried—unsuccessfully— to rationalize away what we had seen.

Between Mr. Sojka and myself we have five engineering degrees and four professional engineering certificates in five different fields (electrical, mechanical, chemical, instrument and control, and metallurgy). I have worked for power utilities and performed many a heat balance during my career. Mr. Sojka has designed many a class "1" semiconductor fabrication clean room/fab. room during his career. Presently Mr. Sojka is working on a $800 million "Fab." in Portland, for which he has designed a building HVAC controller which has been proven to be able to maintain a 300,000 sq. ft. facility within +/- 0.1 degree °C during a 40 degree F ambient temperature change, which occurred over 10 hours in early Sept. '95. Thus, we would claim credit for having a fairly good "feel" for instrumentation, systems response, and control system "errors."

The judgement of the significance of all this still remains, however, with the reader.

Mark Hugo, Senior Engineer
Minneapolis, MN

With reference to Viktor Schauberger [Don A, Kelly letter p.7, *IE* Vol.I, No.3], a few more words:

Austrian-born Viktor Schauberger [1885-1958] had an uncanny feel for the structure of the water molecule and its relation to water's bulk properties — especially as a function of temperature. In the 1930s he claimed to synthesize a 'petroleum-like' fuel from water and atmospheric oxygen. In order to accomplish that goal, oxygen would need to transmute into carbon, with hydrogen as a byproduct of the defunct water-molecule. Carbon and hydrogen would be nascent — recombination into assorted C-H structures would follow. Proton-neutron pairs left over from transmuted oxygen conceivably could form deuterium. Reportedly, he obtained traces of hydrocarbons but process-control was beyond his instrumentation resources. [The definitive Schauberger book is Olaf Alexandersson's *LIVING WATER*,Gateway Books/The Great Tradition, revised ed. 1990, ISBN 0 946551 57 X]

It seems that phenomena encountered in the synthesis experiments, conducted with the aid of a simple, vertical cylinder-piston apparatus, led to further exploration of water-oxygen interactions. The end result was an 'expansion-engine,' to call it that, that developed a pressure of 2,000 atmospheres, upwards of 30,000 psi., using only a few centiliters of sprayed-in water, plus oxygen. Contrary to natural assumption, transmutation per se did not seem involved. This, because the exhaust gases were air-like. A most puzzling aspect of the prototype device is the fact that it was self-scavenging. The exhaust exited an upper port so completely that the piston cleared the port on the down-stroke and descended with virtually no resistance [*Das Raesel Wasser*/ The Water Puzzle - alternatively titled *'Unfathomable Water,'* privately printed.] As was the case for the fuel-synthesizer, control of cycle parameters proved to be an insurmountable problem.

Neither Alexandersson nor anyone else has given a clear account of the principle[s] that underlay the operation of the expansion-engine. Schauberger opined that because the forces inherent in vorticular circulation, atoms/molecules were 'screwed-together' in a fusion process that caused them to subsequently 'implode' and release an inordinately high pressure. He got the principle to work in the construction of two model disc-like aircraft. [No, don't even think it! This was years before the onset of the U.F.O. craze. What Allied pilots were seeing in the skies during WW 2 were foo fighters.] One of the models tore loose from its hold-downs during a test and wrecked itself against a factory ceiling. The principle was put to use again in self-contained apparatus that drove an external electric generator.

The importance of Schauberger's inventions is attested to by two ugly incidents: In 1945, after WW 2's end, Schauberger was picked-up by U.S. military intelligence. He was intensively interogated, the remaining model aircraft, together with all relevant documents were crated up and shipped back to the United States where they have since vanished. [So far, no Groom Lake/Area 51 watcher has reported any sign of a Schauberger-based aircraft slipping silently through the night sky.] In a lengthy 1946 letter to German/Austrian authorities, Schauberger sought relief from nearly a year-long house-arrest. He complained bitterly about being unable to continue his work; saying in essence that his 'atompower' was totally benign, and a far cry from the fission/fusion sort that promised to eventually wreck the world's environment.

The second incident was in 1958. A small group of named but otherwise unidentified Americans, which expressed no little interest in Schauberger's domestic power station, waved an extraordinary amount of money at Schauberger and lured him and his son, Walter, to the U.S. — to Sherman, TX, actually [Alexandersson private communicatio]. There, at a place unlocatable at this late date, they were held incommunicado, while intense efforts were made to milk them of all they knew. Three months later they were released -sans money, sans power station. Evidently that group, as no doubt had the the former Foreign Technology Office of Wright Patterson A.F. Base before them, was unable to fathom Schauberger's Perception of water-energy: At any rate, air, water, or ground machines powered by Schauberger technology are conspicuous by their absence, as are Schauberger domestic power stations. Shortly after his return to Austria, Schauberger died, broke in money, and broken in spirit.

Erwin Krieger
Cincinnati, Ohio

From a U.S. Postal worker in Concord, New Hampshire:

Gene,

I am thinking of you constantly (well, once a day, anyway, when I see the be-whiskered bard of Bow, bounding by, burdened by boxes of booty bound for Biloxi or Bangladesh), so I decided to lavish a few undistinguished lines on your distinguished publication. Use it as filler—if you see fit, or delegate it to the dump, if you don't. I won't be offended!

You know, it's really amusin',
Them folks denyin' Cold Fusion—
They said, "THE WORLD'S FLAT,
COLUMBUS, YOU RAT!"
They love their little delusion.

Hal Rose
Concord, NH

With regard to *IE* vol 1. No. 2, article p.31: ALCHEMY NIGHTMARE: On p.31, re Peter Hagelstein's argument that an atomic lattice can couple to an individual atom, and - "Under certain conditions a neutron can even 'hop' from one atom to another."

Nobel nominee (1977) Louis Kervran in 1960 proposed that 'under certain conditions,' proton-neutron pairs can 'hop' from one nucleus to another. Kervran's conditions were biological; his proposal was made on the basis of 'aberrant observations' compiled over a period of more than 30 years. The first of these were in boyhood: He observed that chickens on his parents' farm in Brittany, France, laid hard-shelled eggs, though they were given no calcium supplement and there was no limestone in the local soil of decomposed slate and granite. Two accompanying observations were that the free-ranging chickens pecked industriously at bits of

New Energy Times Archive

mica exposed by rain; and that when a chicken was prepared for a meal, no mica was found in its gizzard — only small grains of sand.

Kervran's seminal observations occurred over a score of years, beginning in 1935. Iron welders, using 'blowtorches,' inexplicably died of carbon monoxide poisoning. Their helpers were not affected. As a high official in the French government department concerned with industrial health and safety, Kervran could command all manner of professional help, including access to government and other laboratory facilities. Thorough testing revealed no source for the gas, and none was detected in the environment. Yet autopsies showed lethal concentrations of carbon monoxide in the cadavers' blood.

In 1960, Kervran published a proposal that energetic action by unidentified enzymes in the welders' pulmonary tracts initiated the transfer of a proton-neutron pair from one of a nitrogen molecule's nuclei to the other — this, without disrupting the molecular electron population. Kervran reasoned that bright-red, incandescent iron emitted radiation that 'fitted' the vibrational frequency of nitrogen atoms' nuclei, thus establishing a condition of resonance that favored nucleon transitions. The nitrogen molecule's inate stability is such that the resonance persisted as inspired air permeated the lungs of the welders. In lung tissue, enzymes engineered the transit of a proton-neutronpair from one nitrogen nucleus to the other. Thus changing the first atomic number to six carbon, and the second to eight —oxygen. The importance, wrote Kervran, lay in the fact that the transmutations occured within a molecular milieu, and that no radioactive side-effects were attendent.

Kervran pointed out that in biological transmutation it is the individual isotopes of an element that are important. Thus in the instance of the anomalous hard-shelled chicken eggs, potassium 39/19 fused with hydrogen 1/1 to yield Ca 40/20. From this, the likelihood and the extent of biological transmutation is keyed to the relative abundances of the participatory isotopes. In a controlled experiment, chickens were penned over clayey soil in which there was no calcium. They were fed no calcium. When their calcium stores were depleting, the chickens started to lay softshelled eggs; when mica was strewn on the ground, the chickens went 'ape' and gobbled it up as fast as they could. In due course, their eggs were again hard-shelled.

Source: BIOLOGICAL TRANSMUTATIONS, by Louis Kervran, Swan House Publishing Co., 1972, P.O. Box 638 Binghamton, NY 13002 [ISBN 0-913010-02-2]

Erwin Krieger
Cincinnati, Ohio

New Products

Editor's Note: *Electrical engineer and computer artist Dr. David Deak has been involved in the cold fusion field for several years. He has a strong interest in ultrasonically-triggered cold fusion, which he conceived in parallel with Roger Stringham's work. He is currently working on possible applications of acoustic levitation to cold fusion. We are sure that our readers will be stimulated by his review.*

APPLICATIONS FOR AN ACOUSTIC LEVITATION CHAMBER

by
Dr. David Deak
Quantum Σonix Corporation

Introduction

By definition, acoustic levitation is the ability to off-set and thus cancel the "effects of gravity" on specimens contained within the confines of a Helmholtz Resonant Cavity. This is accomplished by generating sound waves from a source such as an acoustic compression driver (another way of saying an electromagnetic speaker), and then by way of acoustic waveguides, directing the sound waves so they can enter the chamber and by design, form half-wavelength mode, resonant standing pressure waves. Forming a half wavelength of acoustic pressure is the minimum requirement for levitation to occur within the boundaries of a resonant cavity. See **Fig.1** where a tri-transducer computer model illustrates acoustic levitation by acoustic radiation forces applied in three *Cartesian* dimensions.

Under computer control, the frequency, amplitude, and phase relationship of the three vectored sound fields provides omni-directional control of specimen movement; and high accuracy of such movement can be easily achieved. *With ultrasonic versions, only one sound field is required with a parabolic reflector, due to the small wavelengths of ultrasound.* **Fig. 2** refers to this version. An elaborate computer programme has been developed to control, either manually or automatically, the levitated specimen.

The levitation chamber *can be designed to operate with sonic or ultrasonic waves*, and depending upon application guidelines, either system can perform efficient sustained levitation; or for that matter horizontal conveyance (levitation in the horizontal mode).

Applications

The ultrasonic levitation chamber allows a multitude of experiments and investigations in the field of fluid mechanics, thermodynamics and heat and mass transfer to be performed on airborne objects.

Some of the immediate applications would be:

1. Levitation of different kinds of par-

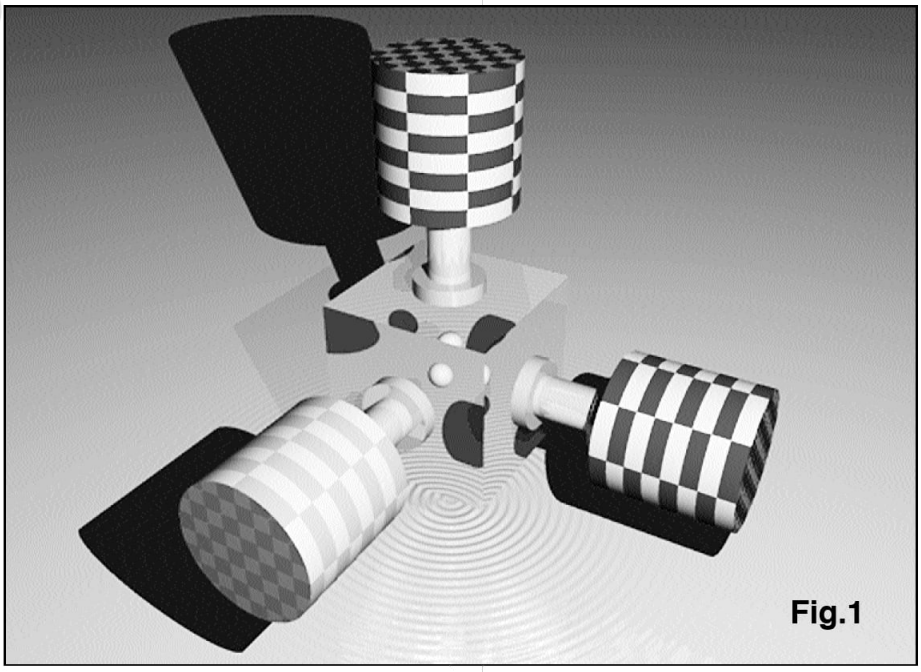

Fig.1

New Energy Times Archive

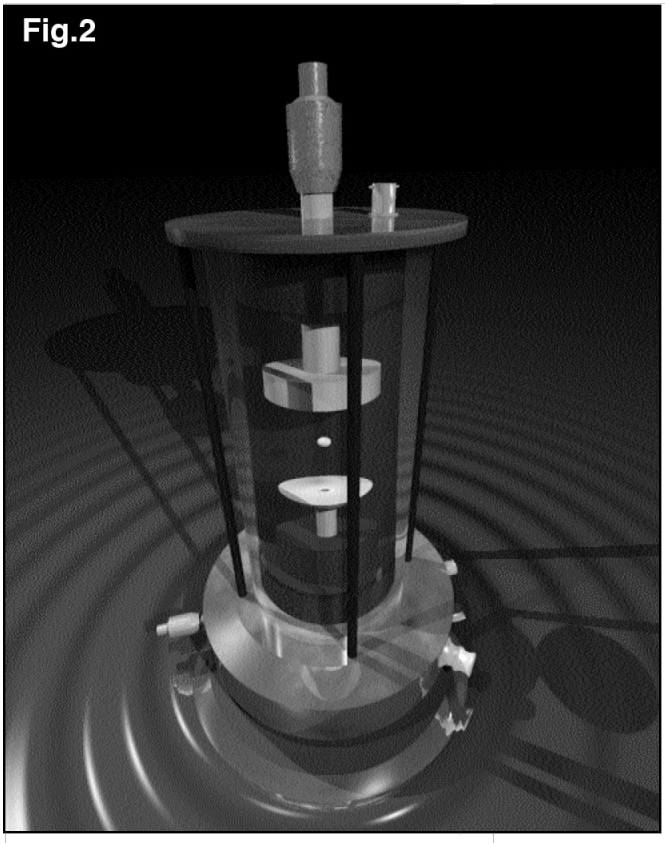

2. In conjunction with a focused laser beam, optical grade glass particles can be levitated and then heated to a molten state. By generating spin on the molten glass (this is done by adjusting the frequency or phase of one of the vectored sound sources), a spreading out of the glass specimen by centripetal forces (the "pizza pie" effect) causes a flattening of the glass; thus forming a lens type shape. After the prescribed shape is formed, the glass is gradually cooled to solidification and then de-levitated. The final process would be to further grind and polish the lens to specification. **Fig. 3** shows a typical configuration

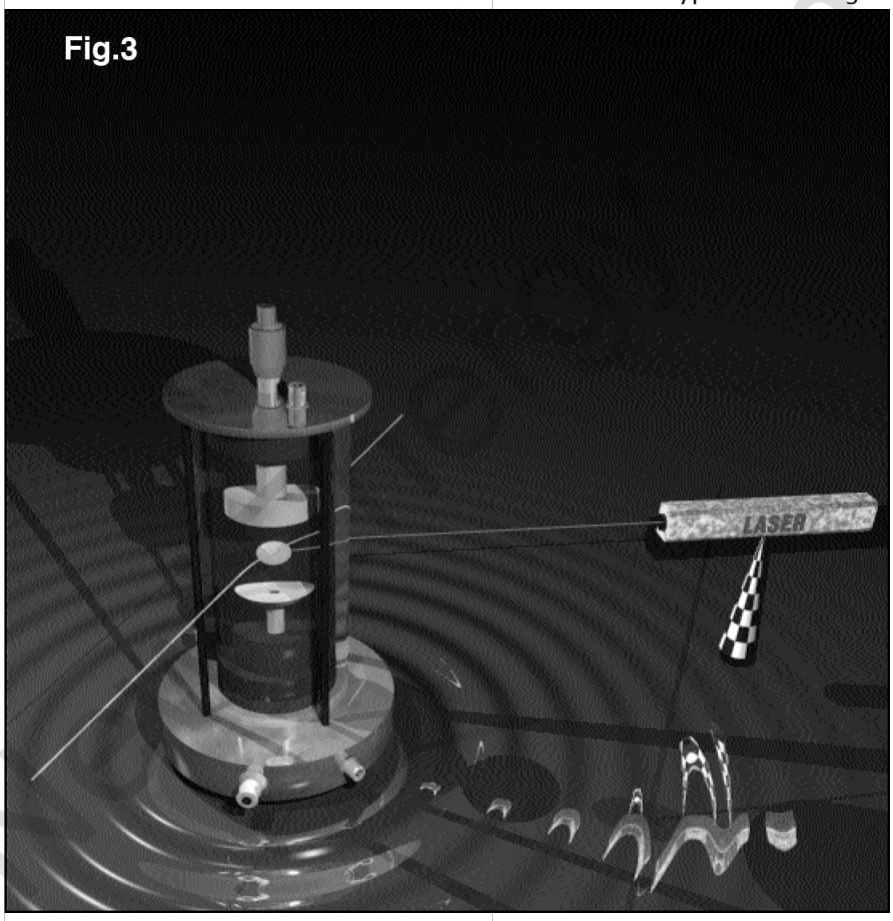

ticles and their separation by density is feasible. For fusion target separation, biological separation, and manufacturing processes in liquid or gas media.

imaged as a computer rendered model.

The important feature to recall is that throughout this process, no mould was used and no human hands disturbed the process. Not having to use a mould eliminates the subject, and concern of contaminants along the mould walls; these enter the glass as impurities which produce *chromatic aberrations*; a costly disturbance.

3. The possibility of forming better ball bearings with greater degrees of spherecity per given specification.

4. ONE OF THE MOST IMPORTANT FEATURES ABOUT ACOUSTIC LEVITATION IS THAT NON-MAGNETIC AS WELL AS MAGNETIC SPECIMENS CAN BE LEVITATED!

5. For possible on-board space shuttle use. Consider the fact that in the weightlessness of the shuttle environment, even if an experiment or procedure called for melting some material such as metal, for forming perfect spheres, a good question to ask is how does one precisely control the possible floating in the shuttle cabin of this hot specimen? Surely by touching it with a probe mechanism would be to grossly disturb it. So if some invisible force (acoustic) field could steer the hot metal to contain it within a certain circumscribed volume, then any danger would be eliminated.

6. Levitating an object within the chamber, and then using a laser aimed at the object would provide a very accurate method of trimming material from the object's surface, for precise micro machining operations.

7. Very uniform coatings or painting can be applied to objects without touching them, thus avoiding contamination.

8. Levitating objects in various gaseous environs and levitating objects in denser gases (noble gases for instance) would lead to a host of other possible applications. As a Gedanken (thought) experiment, it is suggested to contemplate how different gaseous environs would affect the speed of this ultrasound; and further, what an interesting algorithm to write for a computer programme, considering this and other variables in the design of a typical control programme.

Consider also, levitating objects under high pressure using the denser gases within a sealed cavity. This could provide levitating denser specimens without increasing acoustic power.

Archive

9. Manufacturing of metallic glass alloys.

10. It is now possible with this levitation device, to lift small drops of various liquids with different viscosities (densities) and without the slightest disturbance, measure (via laser) the true density of the liquid under test. It can also allow for the definition of surface tension which is defined as *the energy required to increase the surface area of a liquid by a unit amount.* The standard method of using *electrocapillary measurements* in a pipette, is quite accurate, but tedious to set up and a costly procedure involving considerable calculations of differential and integral calculus; at best a refinement process to eliminate experimental error. Using acoustic levitation eliminates this lengthily procedure with increased accuracy and dispatch. It is also advantageous to use acoustic levitation to study the surface tension and other characteristics of molten metals, where the use of magnetic levitation would be most undesirable because of unwanted effects of the levitating magnetic fields. Acoustic levitation is much easier to control than magnetic levitation, and uses less conversion energy to establish a proper levitating field.

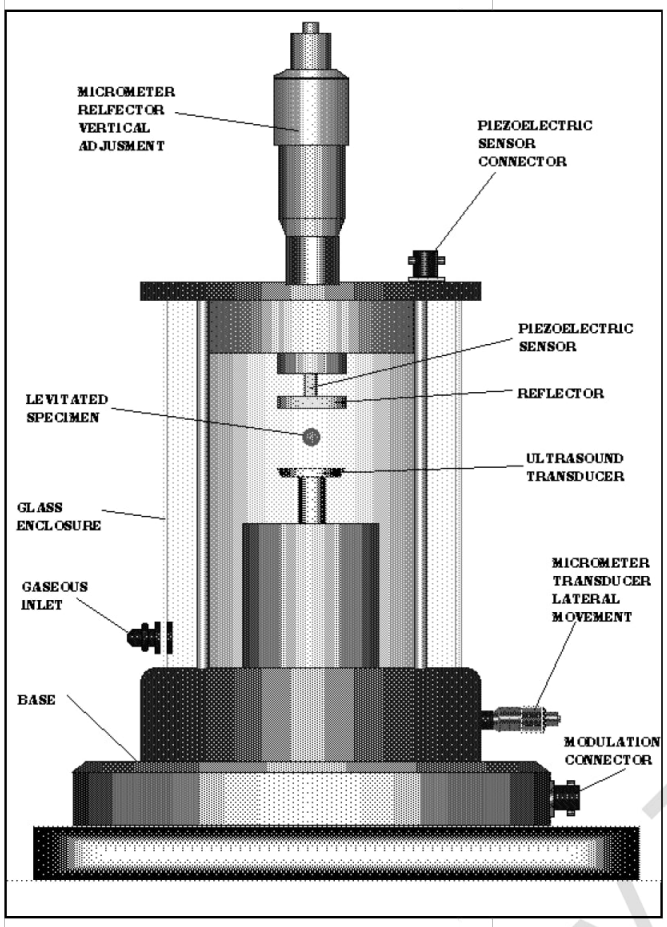

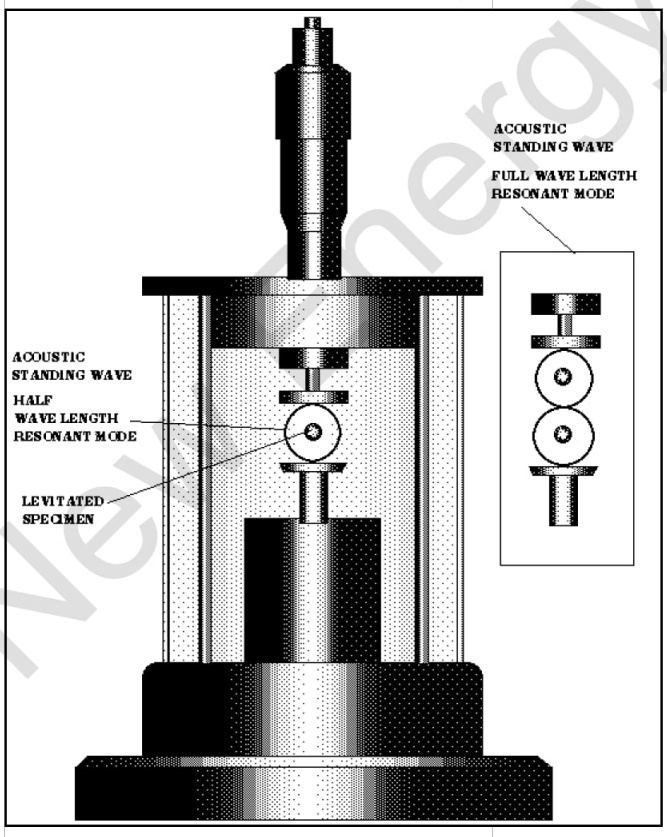

11. The chamber is a novel method of determining the London (Dispersion) Forces associated with fluids. London (or Dispersion) Forces are *the weak attractive forces between molecules resulting from the small, instantaneous dipoles that occur because of the varying positions of the electrons during their motion about the nuclei.* London Forces tend to increase with molecular weight. This is because molecules with larger molecular weight have more electrons, and London Forces increase in strength with the number of electrons. Also, larger molecular weight often means larger atoms, which are more polarizable (more easily distorted to give instantaneous dipoles because the electrons are farther from the nuclei). Acoustic levitation applied to this phenomenon allow for quick and accurate calculations of those forces.

12. Another related application is in measuring the *viscosity* or the *resistance to flow* that is exhibited by all liquids. The viscosity of a liquid depends in part on intermolecular forces and these molecular forces that are prevalent can be analyzed and determined by acoustic levitation techniques. All of these intermolecular combined are termed the *Van der Waals Forces.*

13. With acoustic levitation, ultra-pure *inorganic crystal seeds* can be grown such as *silicon* and *gallium arsenide* for making faster, higher speed, higher frequency, and more economical semiconductors for the microchip industry that serves the computer and general electronics communities.

14. Likewise acoustic levitation can allow for the growth of unique *organic crystals* unavailable with previous techniques, this is due to the *off-setting of gravitational forces* as is also in the case for *inorganic crystal growth*.

15. Acoustic levitation can be applied with great success to studying the heat and mass transfer between droplets and their intrinsic environment.

16. Investigation and the study of melting and solidification of various specimens which can which can quickly give results of purity of metals and other non-metallic solids and compounds.

17. It can be used to determine the accuracy of optical particle sizing instruments this can act as a secondary standard which is traceable to the NIST(National Institute of Standards and Testing.....formerly the National Bureau of Standards), USA; or any other country's standards bureau.

18. Levitation is deemed essential for new improved methods for determin-

New Energy Times Archive

ing the stability and characteristics of *colloids*. Colloids are characterized according to the state (solid, liquid, or gas) of the *dispersed phase* and the state of the *continuous phase*. The dispersed phase is the dispersion of particles of one substance and the continuous phase is the dispersion of the particles throughout another substance. Again these are colloids. A colloid differs from a true solution in that the dispersed particles are larger than normal molecules, though they are too small to be seen with an optical microscope. The particles are from 10 Å (an Angstrom is 10^{-10} meters = Å) to 2000Å in size.

Different types of colloids are *aerosols*, which are liquid droplets or solid particles dispersed throughout a gas. An *emulsion* is a colloid of liquid droplets dispersed throughout another liquid (as particles of butterfat are dispersed throughout homogenized milk). A *sol* consists of solid particles dispersed in a liquid. *This combined with the Deak ultrasonic pump can provide unique filtering of molecules never before imagined possible or at least to cost prohibitive and time consuming to render feasible.*

19. For use in determining the stability and oscillations of charged or uncharged particles in an steady state or fluctuating electric and or magnetic field. This has wide spread use in solid state physics especially in the area of thin film formation used in the manufacture of integrated microcircuits. This also applies to the general field of electrochemistry as well.

20. Yet another very important use of the acoustic levitation device is in the biomedical investigation of various cell cultures. This can be done in various inert gaseous environments without any contamination. Thus serving the entire biomedical and biopharmaceutical community. In conjunction with the Deak ultrasonic pump, acoustic levitation can allow for improved DNA and RNA characteristic studies. Unique experiments on AIDS virus and cancer cell tissue can be studied and experiments performed which were never before realized.

21. As an alternative to electrophoresis, the combination of levitation and the Deak ultrasonic pump would allow for a derivation of electrophoresis (the separation of molecules, molecular clusters such as proteins, etc. by the introduction of electric fields into a liquid or gel medium). This alternative is called acoustophoresis, the separation of molecules by ultrasonic radiation pressure.

Acoustophoresis

As an acoustic wave front propagates through a medium, it has components of energy and momentum; in the process, the loss of energy by the wave is accompanied by a transfer of momentum to the medium that carries the energy.

It is known that molecular chains have different nonlinear properties and absorb acoustic energy through such mechanisms as resonance relaxation, consequently the forces acting on these molecular chains depend on the frequency of the acoustic wave. By definition, the physical properties of the molecular chains, i.e. their length and cluster volume determine the acoustic wave frequency that will impart momentum.

By selecting a specific frequency, resonance can be "tuned" to a selected chemical property, such as acoustic absorption, and physically separate chemical species with different absorption coefficients, that may be impossible to separate by other means.

For the separation of particles or clusters, the choice of acoustic wavelength will change the acoustic scattering process and thus the momentum imparted to the suspended particles.

Now as the frequency is varied from low to high, the larger particles (longer lengths mean lower frequency) will scatter the sound first, followed by the smaller particles in question. The larger particles will be move along a flow gradient first by the transferred momentum.

The separation technique is easy to produce when the particle size and absorption coefficients are reasonably different. However, when the particles are similar in size and the absorption rates are near equal, acoustic streaming may mix the liquid, preventing separation. To minimize this mixing enhanced by acoustic streaming, a second transducer is used as an anti-streaming device. In effect, the second transducer can be tuned to a slightly different frequency from that of the first, and to a different amplitude and phase, thereby producing a high-resolution "shearing" of the liquid into its separate species

The acoustophoresis concept can utilize bulk compressional waves and surface waves or boundary waves between a solid (or liquid) container wall and the subject liquid.

The free surface of the subject liquid acts as a wave guide that contains the input acoustic energy.

A Typical Ultrasonic Levitation Chamber

Attention to **Fig. 4** shows a typical drawing of a functioning ULC. Standard overall dimensions of the ULC would be 127 x 350 mm, where the process inner chamber (within the glass enclosure) dimensions would be 100 x 200 mm. An inlet port for pumping various gaseous environs is incorporated, this is a very important feature for certain pharmaceutical and biomedical applications.

The specimen is levitated by the nodes and antinodes of standing waves of acoustic radiation pressure, established between the ultrasound transducer and the parabolic reflector; which is moveable in the vertical axis by a micrometer adjustment (which can be computer controlled if required). The main reason for the vertical movement of the reflector is to generate a number of these nodes and antinodes. Between each node for instance, one can levitate a specimen. So if one generates three nodes, and each node is at a half wavelength position, then two specimens can be levitated at two different half wavelength heights. See **Fig. 4a.**

Mechanically connected to the reflector is a piezoelectric sensor used to detect if the transducer is emitting acoustic energy. Also incorporated as a design option is a modulation connector. The ultrasound driving frequency can be amplitude modulated to

Continued on page 47

Spread the Message!

Order
Bulk Copies
of
INFINITE ENERGY today.

Minimum Order for Discount:
25 copies
U.S./Canada Rate $100 per 25 copies
Other Foreign: $140 per 25 copies
(Plus shipping charges.)

New Energy Times Archive

CALENDAR

MIT Cold Fusion Day
January 21, 1995
Cambridge, MA

ICCF5 – Fifth International Conference on Cold Fusion
April 9-13, 1995
Monte Carlo, Monaco

Low-energy Transmutation Meeting (Private) At Texas A&M University
June 19, 1995

The Second International Conference on New Energy Systems and Conversions
July 31-August 4, 1995
Istanbul, Turkey

The 2nd World Hydrogen Summit
September 28
-October 1, 1995
Montreal, Quebec, Canada

16th Symposium on Fusion Engineering (SOFE '95), *with cold fusion component!*
October 1-5, 1995
Champaign, Illinois

Third Russian Conference on Cold Fusion and Nuclear Transmutation
October 1—8, 1995
Sochi, Russia

Power-Gen '95
(CETI cell demo scheduled)
Anaheim, California
December 5-7, 1995
(713-963-8833)

Alternative Fuels Conference and Exposition — Sponsored by SAE
December 6-8, 1995
San Diego, California

ICCF6—Sixth International Conference on Cold Fusion
Spring or Summer/1996
Hokkaido, Japan

1996 International World Energy System Conference
June 19-21, 1996
Toronto, Canada

ICCF7—Seventh International Conference on Cold Fusion
1997, autumn-winter
Scheduled for the U.S.

JOURNAL OF SCIENTIFIC EXPLORATION

An Invitation to Explore the Frontiers of Knowledge

The international *Journal of Scientific Exploration* was established in 1987 to provide an unbiased professional forum for research and discussion of topics outside the conventional disciplines of science. Published topics have included anomalies in physics and astronomy, psi-phenomena, medicine, UFO's, astrological claims, cryptozoology, reincarnation investigations, etc. The goal of the journal is to make available high quality reports, reviews and commentary for use by researchers, teachers, students, and the general public. JSE is published quarterly. For further information contact:

JOURNAL OF SCIENTIFIC EXPLORATION
ERL 306,
Stanford University
Stanford, CA 94305 USA
Telephone: 415-593-8581
FAX: 415-595-4466

Annual Subscription Prices
(four quarterly issues)
$35 - Special First-Time Personal
(foreign add $5.00)
$45 - Regular Personal Renewal
(foreign add $5.00)
$100 - Institutional
(Institutions may request invoice)

Continued from page 40

acting in a direction opposite to the direction of movement of a rotor and/or a stator is prevented, so as to permit efficient use of electric energy to be applied to electromagnets, as well as magnetic energy generated by a permanent magnet.

In order to achieve the above object, the first invention comprises a permanent magnet disposed around a rotational output shaft for rotation therewith, the output shaft being mounted on a support member for rotation, a magnetic body disposed in concentric reiationship with the permanent magnet for rotation with the rotational output shaft, the magnetic body being subjected to the magnetic flux of the permanent magnet, a plurality of electromagnets fixedly mounted to the support member in such a manner that they are spaced a predetermined distance around the periphery of the magnetic material, each magnetic circuit of the electromagnets being adapted to be independent of one another and the excitation change-over means of the electromagnets, the excitation change-over means being adapted to sequentially magnetize one of the electromagnets which is positioned forwardly with regard to a rotational direction of the rotational output shaft, so as to impart to the electromagnet a magnetic polarity magnetically opposite to that of the magnetic pole of the permanent magnet, whereby a magnetic flux passing through the magnetic body converges in one direction thereby applying a rotational torque to the rotational output shaft.

According to the first invention, when one of the electromagnets which is positioned forwardly in the rotational direction of the rotational output shaft, a magnetic field created by the excited electromagnet and a magnetic field created by the permanent magnet interact with each other. Thus, the magnetic flux passing through the magnetic body converges toward the exited electromagnet, so as to rotate the rotational output shaft by a predetermined angle toward the excited electromagnet. When

Continued next page

Bulk Copies of Infinite Energy *Are* Available.

Fax: 603-224-5975

New Energy Times Archive

Continued from page 45

create variations in the sound field which establishes fluctuations in the standing waves causing omnidirectional movement of the specimen.

The ultrasonic transducer (which can easily be replaced with different transducers for different frequency ranges) is moveable in a horizontal direction by the micrometer adjustment. Referring to **Fig. 5a, 5b, & 5c**, the ULC with rotation control can handle liquid and solid specimens as dense as steel in both low gravity and normal Earth gravity. This single-axis levitator accomplishes at ultrasonic frequencies what a three axis sonic levitator does by virtue of the ultrasound wavelength being quite small in comparison the chamber and sample dimensions.

A circularly symmetrical acoustic driver transducer excites a standing acoustic wave under a circularly symmetrical reflector, which is wider than the driver. Operating at a frequency of 10 kHz, the levitator can handle specimens ranging in size from 0.1 mm to 8 mm. The exact resonance of the inner chamber is tuned to accommodate the size of the specimen. When the driver and reflector are coaxial, the levitating acoustic field exerts no torque on the specimen. When the reflector is moved aside, however, the specimen translates with the reflector into the off-axis region of the airflow field induced by the acoustic driver. In this region, the flow exerts a torque about a rotation axis perpendicular to the driver axis and to the direction of offset. Thus, by offsetting the reflector in a chosen direction, the specimen can be made to rotate about any axis in a plane perpendicular to the axis of the driver. The torque, and ergo the speed of rotation, can be adjusted by the choice of the offset distance or of the acoustic pressure. In experiments, solid spheres have been rotated as fast as 50 revolutions per second. This is not the limit however. This technique has various applications in containerless manipulation for material science studies in microgravity as well as on the ground.

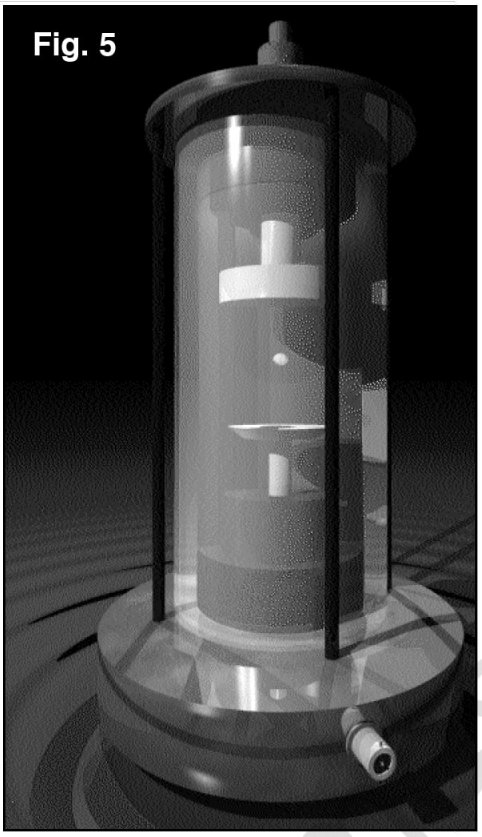

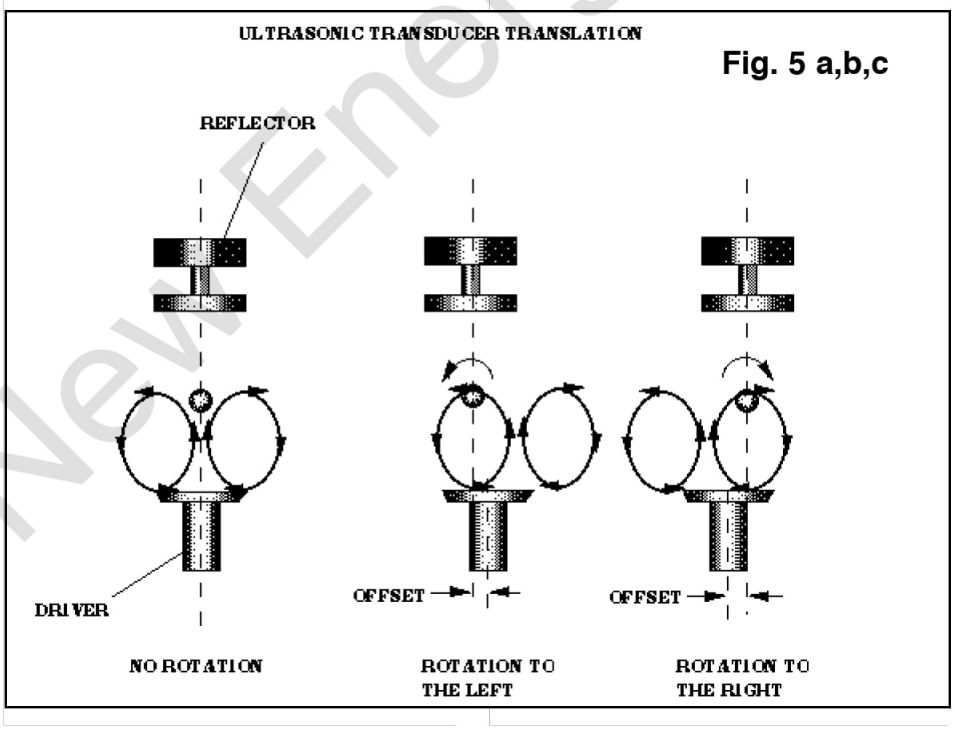

The overall conclusion is that new chemical and physical techniques will be invented from the use of acoustic levitation.

David Deak
39π Great Jones Street
New York, NY 10012
02 November, 1995

Continued from page 46

the rotational output shaft has been rotated by the predetermined angle, the above excited electromagnet is de-magnetized, and another electromagnet currently positioned forwardly in the rotational direction of the rotational output shaft is excited or magnetized. Sequential excitation of the electromagnets in the above manner permits rotation of the output shaft in a predetermined direction. In this regard, it is noted that the electromagnets are excited to have a magnetic polarity opposite to that of the magnetic pole of the permanent magnet and that the magnetic circuit of the excited electromagnets is independent from those of adjacent electromagnets. Thus, the magnetic flux generated by the excited electromagnet is prevented from passing through magnetic circuits of adjacent electromagnets, which, if it occurs, might cause the electromagnets to be magnetized to have the same polarity as that of the magnetic pole of the permanent magnet. Accordingly, no objectionable force will be generated which might interfere with rotation of the output shaft.

In order to achieve the above object, the second invention composes a permanent magnet mounted on a movable body arranged movably along a linear track, a magnetic body mounted on the permanent magnet, the magnetic body being subjected to a magnetic flux of the permanent magnet, a plurality of electromagnets spaced an appropriate distance along the linear track, said electromagnets having respective magnetic circuits which are independent of one another and excitation changeover means of the electromagnets, said excitation change-over means being adapted to sequentially magnetize one of the electromagnets which is positioned forwardly with respect to the direction of movement of the movable body, so as to impart to the excited electromagnet a magnetic polarity opposite to that of the magnetic pole of the permanent magnet, whereby a magnetic flux passing through the magnetic body converges in a predetermined direction so as to cause linear movement of the movable body.

According to the second invention, when

Continued next page

New Energy Foundation Archive

Washington Watch

• Cold Fusion at the Cosmos Club!
Dr. David J. Nagel of the U.S. Naval Research Laboratory, long associated with the cold fusion field, spoke at an important meeting in the nation's capital. This was the text of the meeting announcement:

The Philosophical Society of Washington, Founded 1871
2048th Meeting
Friday, October 20, 1995, at 8:15 pm

John Wesley Powell Auditorium,
Cosmos Club
(Entrance at 2170 Florida Ave., NW)

David J. Nagel
Naval Research Laboratory

Whatever Happened to "Cold Fusion"?

"Cold Fusion" is now ignored, disdained and even mocked by scientists and the public. This is due to a variety of mistakes by scientists and the government, and the unwillingness of journal, magazine, and newspaper editors to pay attention to this topic. But, does this mean that nothing is being done, or should done in response to questions raised by work on "cold fusion"? Several hundred people world-wide are spending part or full time trying to get to the bottom of mysteries which followed from the 1989 announcement by Pons and Fleischmann. The fifth international conference in Europe earlier this year attracted 200 people, half of them with industrial connections mainly from Japan, Italy, France and the U.S. There are also active programs in Russia, India and China. A framework for organizing work on "cold fusion" will be presented, along with some of the data which cannot in the opinion of the speaker be attributed to fraud or error. If correct, these data would strongly indicate that nuclear reactions are behind some of the observations. They do not support the view that such reactions are ordinary fusion; hence, "cold fusion" is merely a label and not an assertion of what is happening. It will be argued that government funding of work in this area would not be wasteful, since hydrogen science and technology are accepted fields of inquiry. They form the basis of a large and growing industry in the U.S. and abroad.

David J. Nagel graduated (magna cum laude) from the University of Notre Dame (B.S. in Engineering Science, 1960) and performed graduate work a t the University Maryland (M.S. in Physics, 1969, and Ph.D in Engineering Materials, l977). During active duty with the Navy, he was Navigator aboard the USS ARNEB on OPERATION DEEP FREEZE (1960-62) and then served as a Technical Liaison Officer at the Naval Research Laboratory (NRL) (1962-64). Since joining the civilian staff of NRL in 1964, he has held positions as a Research Physicist, Section Head, and Branch Head. Dr. Nagel's research interests center on radiation physics, espccially spectroscopy, with applications to materials analysis, plasma diagnostics, environmental studies and "cold fusion." Dr. Nagel is lead-author of a patcnt on x-ray lithography which formed the basis of a 100-person start-up company in Rochester, NY. Currently, he is concentrating on applications of Micro ElectroMechnicalSystems (MEMS). He is a member of the Senior Executive Service and serves as Superintendent of the Condensed Matter and Radiation Sciences Division. He manages the experimental and theoretical research and development efforts of 120 government and contractor personnel. Dr. Nagel has written or co-authored 125 technical articles, reports, book chapters, and encyclopedia articles. He retired as a Captain in the United States Naval Reserve in 1990.

Continued from previous page

the electromagnet positioned forwardly of the forward end of the movable body with regard to the direction of the movement of the movable body is excited, a magnetic field generated by the excited electromagnet and magnetic field generated by the permanent magnet interact with each other. Thus, a magnetic flux passing through the magnetic body converges toward the excited electromagnet, so as to displace the movable body a predetermined distance toward the excited electromagnet. When the movable body has been moved the predetermined distance, the movable body is positioned below the above excited electromagnet. and another electromagnet is positioned forwardly of the forward end of the movable body. When this occurs, excitation of the electromagnet positioned above the movable body is interrupted, and excitation of the electromagnet now positioned forwardly of the forward end of the movable body is initiated. Sequential excitation of the electromagnets in the above manner permits movement of the movable body in a predetermined direction. It is noted that no objectionable force which would interfere with movement of the movable body is created for the same reason as that explained in relation to the first invention.

Editor's comment:
And so the summary of the invention ends.

Readers would do well to go back to Issue #1 (March/April 1995) of *Infinite Energy*, pages 48-49, in which appears a transcript of an October 1993 FUJI television program concerning these magnetic motor developments in Japan. Dr. T. Kawai, the inventor awarded this U.S. patent, is a prominent figure on the program. The motors shown are exactly as illustrated in this patent. On that program, Kawai insists that a new form of energy has been discovered—as do his colleagues. Major Japanese corporations are said to be involved in this effort—witness the assignment of this patent. Indeed, in the tape of the 1993 program, experiments with these motors evidencing over-unity performance are clearly seen. (*Cold Fusion Technology's MIT Day 1995 tapes depict this, see ad on page 59 of this issue.*)

Dr. Harold Aspden of the U.K., writing in *IE* Associate Editor Hal Fox's *New Energy News* (November 1995), has this to say:

"Those skilled in the design of electric motors will soon become wizards as they practice the black art of producing motors which are powered by a ghost that pure science does not recognize. It is no longer a question of whether or not a motor can deliver more mechanical power than it consumes as electricity, but rather a question of who will win the race to design the best commercial implementation."

Infinite Energy is investigating other magnetic motor claims, tests, and observations, which are *even more remarkable than the information contained in this landmark U.S. patent of Kawai.* In following issues, we will continue our pursuit of the truth about the these motors—wherever that truth may lie.

Coming Soon—
A Classified Ad Section!
Place a classified ad for only 50 cents ($.50) per word per insertion. Fax your ad to 603-224-5975 and we will bill you for its cost.

New Energy Times Archive

A physicist and Apollo astronaut previews the Free Energy Age....

Editor's Note: We are greatful to Dr. Brian O'leary for allowing us to reprint excerpts from his recent book, *Miracle in the Void: Free Energy, UFOs, and Other Scientific Revelations*, Kamapua'a Press, 1993 S. Kihei Road, Suite 21-200, Kihei, Hawaii 96753, USA. Dr. O'Leary considers that cold fusion and "free energy" are both part of a gigantic paradigm shift in physics and human unserstanding that is now well underway.

Brian O'Leary, Ph.D., is a former Apollo scientist-astronaut and Princeton University Physics Department Faculty Member. He is co-founder of the International Association for New Science and the Institute for New Energy. Miracle in the Void, Exploring Inner & Outer Space, *and* The Second Coming of Science *comprise a trilogy of O'Leary's recent work on New Science*

Preface

This book completes my new science trilogy, an exploration which has taken me all over the world many times for a decade. My quest has been to witness demonstrations and experiments on concepts that transcend our current sci-entific worldview (paradigm) of reality. The evidence presented to me has been so dramatic, it confirms a shift in the near future to a global culture that will not resemble the one we have now.....

My initial motivation for this project was to report the latest on free energy developments, based on eyewitness accounts (including mine) of proof-of-concept. But when I really began to reflect on the implications of all this, I saw that I had a tiger-by-the-tail, because all existing energy sources would become obsolete. The economy would have to change. There would be feelings of grieving [for] the old culture.

The reality of being able to extract cheap, clean and abundant energy from the vacuum has only recently been acknowledged by mainstream physicists in the peer-reviewed literature, and it is being developed now in Japan and elsewhere. My technological forecast on this one is radical. Watch out for what's coming!

My perception that we could replace the polluted, depleted fossil fuel economy soon with a free energy era is not a new one. It has been with us for more than a century since the time of Nikola Tesla. It seems incredible that nobody in power or with substantial money has embraced this possibility or has taken sufficient time to look at it. Having been an astronaut in the Apollo program, I have seen goal-setting and vision at their best. We can do the same for free energy. This book deals with both the suppression and the promise of free energy and other scientific revelations.....

Appendix II

Presented to the International Symposium on New Energy, Denver, May 12-15,1994

GREEN POWER:
The Coming Free Energy Revolution and the Return to Eden

by Brian O'Leary, Ph.D.

Abstract

This is an energy policy and opinion paper about the potential for free energy to reverse many of the great stresses on our environment. Free energy could soon relieve us from burning up the Earth's oil in our transport vehicles, and stop us from abusing fossil fuels and nuclear power for generating electricity (air pollution, global warming, unhealthy, unsightly grid systems, nuclear waste disposal and proliferation, etc..) The existing worldwide $2-trillion-per-year energy industry will sooner or later give way to renewable sources, the most promising of which appears to be free energy. I have visited several highly qualified free energy inventors/researchers in their laboratories throughout the world and have witnessed several proof-of-concept demonstrations of free energy. Work so far has been suppressed in many ways. I propose establishing an international consortium in which the technical community could transcend the forces of suppression and greed, with the near-term goal of manufacturing appropriately-scaled free energy devices available for everyone. Free energy could become our chief catalyst for the forthcoming "paradigm shift" toward a New Science.

Introduction: Confessions of a Mainstream Scientist of the Seventies

Free energy. About twenty years ago, when OPEC raised its oil prices and energy crisis erupted, I began to look at how we in our culture were abusing energy from several perspectives. Over those years my professional roles included being aPh.D. physicist/astronomer, author, astronaut, professor, science policy analyst, industrial aerospace scientist, Congressional aide and advisor/speechwriter to presidential candidates George McGovern, Morris Udall, Walter Mondale, and Jesse Jackson on science and energy issues.

During the public revelations about our energy abuse, I was a liberal academic of the tradition of a Berkeley, University of Texas, Cornell, Caltech, San Francisco State, Hampshire, Amherst, University of Massachusetts, Princeton and Penn. (Believe it or not, I had served on the faculties of *all* of these Universities between 1968 and 1980 until I discovered slowly that the academic world in my field was much too limiting.)

I also worked during the early 1980s for Science Applications International Corporation (SAIC) in a vain attempt to study advanced space energy concepts for NASA which they only supported at rare intervals. The only lucrative projects came from the U.S. Strategic Defense Initiative (Star Wars) program, which I refused to work on, so I had to leave the company in 1986, when I became a free-lance "new scientist" speaker/author poised on the edge of insecurity yet free to search for the truth (O'Leary, 1989 and 1993a).

This rather unsettled history resulted in a lot of exposure to scientific and engineering reality. It also perpetuated a myth most mainstream scientists seem to harbor: that radical new ideas such as free energy and UFOs are to be avoided at all cost. Therefore, I was (naively) protected from inquiries about fringe science.

Although rarely confronted about it from the outside, I had been influenced by some of my more vocal Establishment colleagues that any prospect that we could extract electricity, mechanical power, heat or cold from what we call nothing—the vacuum—was basically a nutty idea of a grade B. uneducated science fiction writer. My years of physics training and teaching had firmly grounded me in energy-mass conservation laws that appeared to hold us in their grip as the planet/universe seemed to be heading helter-skelter toward ecological/entropic disaster. The direction was due in

New Energy Times Archive

large part to our abuse of energy sources—something about which I began to become acutely aware and depressed during the 1970s.

"You can't get something from nothing," my colleagues had smugly admonished me and I in twn had admonished my students. Perpetual motion was a dead issue. Otherwise, we high priests of reality continually argued, why don't we already have a machine that produces more energy than goes into it? Because such a device didn't exist, we surmised, we see continuing proof that there is no free lunch, that our sacred conservation laws we upheld.

In a physics lecture I once gave at Princeton, I even risked my own life "proving" to the students the energy conservation laws: I climbed to the top of a tall ladder in the front of a cavernous Gothic lecture room, and with my back pinned against the wall, I let go of a 20 kilogram weight at the end of a huge pendulum, which swung across the room from my nose and then dramatically hurtled back toward me until it came to rest a mere inch from my face—saved again by physical orthodoxy! The demonstration showed energy conservation, with small losses in friction and air resistance, accounting for the fact that the pendulum ended up about-one inch short of its release point—my nose.)

Regarding our big global oil burnup and abuse of electricity, I soon adopted a liberal academic view that we shall have to continue developing incremental, capital-and-materials-intensive, land- encroaching, intermittent and diffuse energy sources such as the sun, wind, ocean, hydrogen fuel, biomass, and even huge space satellites, to slowly alleviate our energy crisis. Meanwhile, a middle-ground policy emerged that we use even more of the Earth's oil and build some more nuclear power plants with increased safety standards, while developing small steps toward energy conservation and global sustainability.

This moderate view has gradually taken hold throughout the world over the past twenty years, during which the consumption of electricity has more than doubled (Flavin and Lenssen, 1994) and the use of oil has more than tripled (Lowe, 1994). Meanwhile I have gradually grown to realize that all this needn't be so, and that we have an opportunity to spawn a major international initiative to significantly help return the Earth to its former pristine state by using free energy instead of abused energy. I am sure our short-sighted energy-abusing juggernaut will puzzle historians of future generations.

Green Power: The Promise of Free Energy

The early promise of free energy is that our current polluting infrastructure will become obsolete. Electrical power systems probably based on compact solid state devices wDI replace the fuse boxes and circuit breakers of individual homes and buildings free of the grid system. The systems will also be portable, eliminating the need for storage systems such as batteries. They will replace the internal combustion engines in our automobiles and other transportation and industrial systems. And they can be used in the field to dramatically increase agricultural efficiency (e.g., pumping for irrigation) and therefore help eliminate hunger in Third World countries.

It appears that this source of energy, if properly applied, can go a long way to meet the most stringent ecological criteria of sustainability and the restoration of clean air, land and water. And perhaps most importantly, free energy will open a new paradigm of science and technology that will change the face of the Earth; it could make the Copernican and Industrial Revolutions appear tame. Redirecting $2 trillion per year from obsolescence to sustainability and affordability is unprecedented in world history.

But we will need to develop policies in which these energy devices are scaled appropriately to their end use, and not overused or applied to weapons.

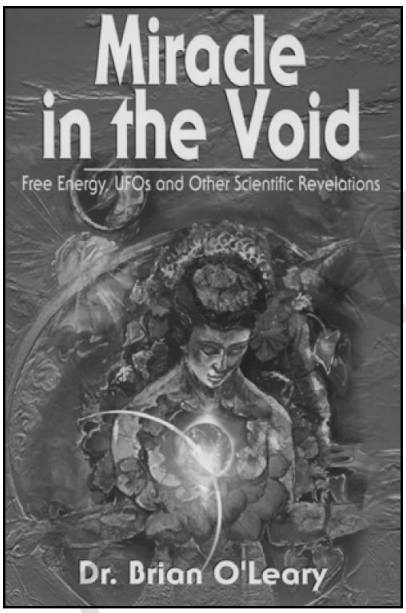

Miracle in the Void

Free Energy, UFOs and Other Scientific Revelations

A book we must ALL read.

"I loved this brilliantly conceived wise and wonderful book."

Whitley Strieber
author of **Communion** and **Breakthrough**

For 24 Hour Visa or Mastercard orders CALL 1(800) 842-8338

A Press Release received by *Infinite Energy*:

Contact: Jamie Schroeder 212-633-4460

DISCOVER Magazine Announces Seventh Annual Awards for Technological Innovation

Announcing a Call for Nominations
New! $100,000 Fellowship

DISCOVER Magazine is now accepting nominations for the 1996 DISCOVER Awards for Technological Innovation. The awards recognize breakthrough technologies and honor the men and women whose creative genius improves the quality of everyday life. Honors are bestowed in eight categories: Automotive and Transportation, Aviation and Aerospace, Computer Hardware & Electronics, Computer Software, Environment, Sight, Sound, and Emerging Technology—Editor's Choice. One nominee will receive a $100,000 fellowship presented by the federally-chartered Christopher Columbus Fellowship Foundation. Winners will be announced at a gala Academy-Awards-style televised presentation at Epcot at Walt Disney World Resorts in June of 1996. All winners and finalists will be featured in DISCOVER'S special July 1996 Awards issue.

The deadline for nominations is DECEMBER 1, 1995. For more information on the DISCOVER Magazine Awards for Technological Innovation or to request a nomination package, please call 215-579-8590 or visit DISCOVER's home page on the World Wide Web at <http://www.enews.com/magazines/discover>.

New Energy Times Archive

Why all the Static?

by Jeffery D. Kooistra

OK, so you've invented a cold fusion/over-unity device and the world has beaten a path to your door, except they're holding torches and pitchforks and seem ready to burn you at the stake. Why? I cannot answer that, but I can tell you that you're not alone. The same mindset is everywhere, and clouds seemingly every controversial debate.

Around 1980 a father/son team of scientists named Alvarez (the elder a Nobel laureate in physics, the junior a Ph.D. in things geological) determined that about 65 million years ago a whopping big asteroid had collided with the Earth and suggested that this could account for the extinction of the dinosaurs at that same time. This neatly solved a longstanding mystery in the dinosaur community, but did paleontologists rejoice at the discovery? No. The Alvarez's were treated like, well, cold fusion researchers are today, at least by the paleontologists. Their views were rejected and ridiculed for, among other reasons, the fact that neither of them were paleontologists. And besides, the dinosaur community was quite capable of putting together its own scenario for the demise of the dinosaurs, thank you very much, and they didn't need any meteor to explain it. (That the geological record clearly showed that a large extraterrestrial impact must have taken place was simply pooh-poohed away.)

Despite this, the impact view is now largely accepted by everyone as being at the very least a primary cause of the demise of the dinosaurs.

The impact theory is not the sort of thing just anyone can investigate, particularly when it involves searching for minute extra amounts of iridium in soil at the Cretaceous/Tertiary boundary, so most of the public couldn't actually evaluate the nature of the evidence first hand. Thus, it was easy for the "defenders of the traditional view" to obfuscate the issue with technical language and imprecations such as: "Alvarez couldn't tell a comet from a carnosaur," or words to that effect.

But now let's look at an "easy" controversy, one that involves the sort of evidence that everyone can understand. In such a case, it should be harder for the establishment to defend against a challenger by hiding behind jargon and authority, right?

Lately a guy named John Anthony West has popularized the notion that the Sphinx in Egypt must be thousands of years older than has previously been thought because the erosion on the back of the giant statue is: 1) clearly caused by rainwater, 2) by more rainwater than has fallen since the traditional date for the construction of the Sphinx, and 3) nothing else in the vicinity supposedly constructed at the same time as the Sphinx shows the same degree of rainwater erosion.

The obvious way to test this hypothesis is to get yourself a good erosional geologist, have him investigate the erosional features, and render a learned judgement. This is exactly what West did, and the geologist, Dr. Schoch, has in fact determined that the Sphinx must be at least several thousand years older than previously believed.

Did the Egyptologists accept this finding and go back to reappraise their views of the Sphinx? No. Instead they vilified West, denigrated him for not having a Ph.D. (as if erosional features lie to people without doctorates), and repeated (more loudly this time) their mantra for why the Sphinx can't possibly be as old as the physical evidence demands, as well as inventing an entirely ad hoc method of erosion that affected only the Sphinx and it's surrounding enclosure, but nothing else nearby. All this despite the fact that the case for the traditional date given for the construction of the Sphinx is entirely circumstantial in nature--there's not a hard fact anywhere in sight.

What you find in examining this case is typical: The establishment repeats its old arguments and attempts to refute part of the new view in hopes that it will all go away. *Archaeology* magazine recently devoted almost half an issue to the question of the age of the Sphinx wherein the established voices presented their best case. A letter from Dr. Schoch appearing a few months later easily demolished the magazine's presented case because he had facts on his side and the others had only inferences and long repeated dogma.

In these two cases, you have a situation where the "universally accepted view" is being attacked by real evidence. The paleontologists had never thought of a meteor, so their carefully constructed version of the demise of the dinosaurs was in danger of coming apart as if it, and not the Earth, had been hit by the meteor. In the case of the Sphinx, Egyptologists are very happy with the history of Egypt that they've written, and they don't want anyone to come along pointing out that they've mislaid an entire earlier high civilization.

In both cases, the establishment exhibited responses much like children when they first learn where babies come from and realize that this also applies to their parents: Shock, horror and disbelief.

Both paleontology and Egyptology are established fields of study complete with fuddy-duddies almost old enough to be studied themselves. Yet attacks on those who would shake the paradigm come even against those in "far out" fields from others in the same field.

Consider the case of the Face on Mars. By now almost everyone has seen the image of the humanlike face that the Viking spacecraft photographed on Mars. The image was dismissed as a "trick of light and shadow," and this certainly seemed reasonable to everybody at the time, including those now making different claims. Upon further inspection, it was discovered that under enhancement the face image continued to look like a face. After a search, a second frame from a different sun and photo angle was found, and still the image persisted in looking like a face. Couple this with some other anomalous structures in the same vicinity and several researchers, the most out front of them being Richard C. Hoagland, finally came out and said, "Hey, this looks like it could be an alien artifact. Maybe we should get NASA to take some better photos so we can find out for sure." But no. NASA, which had routinely lobbied congress in the past for millions of dollars to look for alien artifacts in the electromagnetic spectrum (radio signals), somehow just can't bring itself to photograph the Face region with higher resolution cameras, despite having spacecraft heading to Mars anyway. It would be one thing if someone wanted to do a multimillion dollar photomapping mission with absolutely no idea where to look (sort of like the current radiotelescopic SETI work) but the Face is right there staring us in the face.

Even when you are in the same "community of believers," so to speak, you can be attacked relentlessly for asking the wrong questions or getting the wrong results.

I recall vividly the spring of '89 when cold fusion had its advent. Here were two guys with Ph.Ds in electrochemistry, "hard scientists," claiming that they'd found a way to get hydrogen to fuse inside palladium electrodes. What happened after that is familiar to everyone. In my case I have sardonic

New Energy Times Archive

memories of the glee with which some of my colleagues, ordinarily decent men, wanted to see Pons and Fleischman pilloried when others couldn't immediately duplicate their results. (Never mind that these same professors had themselves spent years trying to get some of their own experiments to work properly.) One professor, an ordinarily brilliant man, tried taking as evidence that Dr. Pons was supposedly (according to opponents) not telling the truth about his work, a second hand account of how Pons appeared agitated during an interview by a cluster of reporters, even though it was common knowledge at the time that Pons wasn't getting much sleep lately. (Never mind that this same professor was legendary in the department for throwing temper tantrums (and sometimes objects) when he was in an agitated state.)

Also of note was how rapidly cold fusion was dismissed when fusion neutrons weren't found, even though the excess heat wasn't explained, nor even really explained away. The consensus opinion in our department was that electrochemists couldn't do calorimetry.

Well excuse me, but the fact was that physicists didn't know a damned thing about what was going on inside those electrodes, so their assertion that "no neutrons means no effect" was bad science at its most flagrant.

There is a scene from the movie *The Exorcist* that I show my students whenever I teach Physics for Poets. It takes place at a point in the movie where the audience has seen enough to know that the girl is, in fact, possessed, and the medical establishment has exhausted all the tools of early 1970s medical science in a fruitless attempt to explain the girl's symptoms as some known malady. It should be noted that the doctors have already ignored or explained away other relevant evidence of the girl's real condition (seeing was not believing). All of the doctors are sitting around and the distraught mother is beside herself about what to do, and finally the lead doctor suggests that there is one treatment he's heard about that seems to work in some primitive societies, but not for the reasons they say it does. He then suggests that the lady find herself an exorcist.

Notice what happens here: Even though the doctors had exhausted their art in an attempt to find an answer, they still felt comfortable in denigrating the answers offered by those who had genuine experience with the problem.

Does any of this seem familiar to you, Cold Fusion researcher?

What are we to make of all this?

In Dr. Edmund Storms's commentary in the first issue of *Infinite Energy*, he says that "the vicious and hostile attacks directed toward many in the field (by some skeptics) have no place in normal science."

But they do have a place in "crisis state science."

We hear the term "paradigm shift" used today (often incorrectly) as often as we used to hear "quantum leap" (also often incorrectly) just a few years ago. For those rusty on their philosophy of science, the term paradigm comes from Thomas Kuhn's *The Structure of Scientific Revolutions*. A paradigm consists of the accepted theories and accepted evidence for those theories, as well as accepted means for obtaining that evidence, with which the bulk of a scientific discipline agrees. During periods of normal science, evidence that conflicts with the established view is often ignored or explained away, though not necessarily (in fact, seldom) refuted. Evidence counter to the prevailing paradigm is called an anomaly. After awhile, enough anomalies accumulate to topple the paradigm, and this is when science goes into its crisis state. But first it has to be accepted that the anomalies are real.

Right now the physics community is in a state of denial about the reality of the anomalies. Reputations are being scorched, and whole states are being denigrated (Glashow's infamous "Never trust a four-letter state" observation, referring to Utah, and presumably Iowa and Ohio, too.) It doesn't help that an awful lot of money is being funneled into big government fusion projects, and so jobs hang on the final verdict about Cold Fusion (witness how worked up union workers get at line-crossers, and they don't even have a paradigm at stake). And dare I say it? It also doesn't help that so many who obtain doctorates these days, even in the sciences, do so by being seven years of cheap labor for their thesis advisor, and their mediocre minds learn one thing very well--the advantages of going with the flow.

Fortunately, history shows that the old view dies out and the new takes its place as experimental evidence accumulates and only the theories from the new paradigm can fit the anamolous pieces together. So for you, cold fusion researcher, take heart. Keep experimenting and keep exchanging information. But keep the castle doors locked until those torches go out and those pitchforks come down. They always do.

SEMINAR ON VISION 2020
(July 19-21, 1995)

VISION 2020 "COLD FUSION": PARADIGM SHIFTS WHICH CAN DRASTICALLY AFFECT OUR PLANS/PROJECTIONS.

Dr. M. Srinivasan
Associate Director, Physics Group, BARC
Bhabha Atomic Research Center, Bombay, India

The Department of Atomic Energy has been charged with the responsibility for developing the technology of commercial Nuclear Power and carry out R & D in associated areas encompassing the entire nuclear Fuel cycle. The promotion of various applications of radioisotopes in industry and agriculture is the second major responsibility of DAE. In the nuclear power sector the guiding philosophy has been the "Three Stage Nuclear Power Programme" originally formulated by Dr. Bhabha in the early 50s. Thus the epoch making discovery of nuclear fission which occurred over half a century ago is the original embryo from which the entire nuclear industry has grown the world over.

In formulating a plan and vision for the next quarter century, it seems to me that it is automatically assumed and taken for granted, that this half a century old discovery, namely fission and only fission can and is going to provide a means of tapping the energy locked within the nucleus or indeed of any other source of energy. Has the scientific creativity of man come to a standstill that we take for granted that no new scientific breakthroughs are going to occur or possibly has even occurred already under our very eyes? A deliberation such as Vision 2020 is obviously the apt forum to examine such questions. In such a discussion involving long term projections, it would not be wise on our part to keep a blind eye to the possibility that some new discovery/invention may take place or has already taken place which can completely and totally upset all our thinking and calculations!

Most of you might have already guessed that what I am driving towards is the new phenomenon of "Cold Fusion." I am fully aware of the highly skeptical reaction of most senior scientists to the phenomenon of "Cold Fusion." I however consider myself lucky to have had the opportunity to interact with almost every single important cold fusion researcher in the world and to have listened to their talks and also to have discussed with them in detail their experimental results. I have attended four out of the five international conferences on Cold Fusion held in the six years since the announcement of the discovery of the phenomenon. Besides, a number of experiments carried out by myself and my colleagues at BARC have fully convinced us that cold fusion is for real. Hence when I "claim" that a new method of releasing what appears to be nuclear energy, in small table top systems has been discovered, I say that with all the seriousness and responsibility that such a statement deserves. At ICCF-5 held at Monte Carlo during April 1995, throughout the four day meeting a light water cold fusion cell, which has been granted the first patent for a cold fusion device in the USA in December 1994 and known as the Patterson Power Cell, generating excess power of upto 600% was kept operational in the lobby. We were informed that this cell has been taken up for possible commercialization by the Bechtel Corporation of USA. The international cold fusion community has a strength of almost 1000 researchers today. I can of course go on to give a long lecture on what has been observed and achieved so far the world over and also why the scientific community by and large has found it difficult to accept the experimental findings etc. But this is not the occasion to go into details of that nature.

Let us for the moment leave the question of the reliability and validity of the experimental findings apart, and examine briefly only the question of what would

Continued on page 58

New Energy Times Archive

Hey Buddy, Can You Spare Me A Paradigm?

by David Moon

An English-Norwegian American reviews the
BBC and Canadian Broadcasting Corporation's cold fusion documentary,
"Too Close To The Sun." Length: 50 minutes, first broadcast in early April 1994.

The year was 1883. The place was the University of Upsala in Sweden. It could well have been called "Oops-ala" since the University goofed at the time by awarding Svante Arrhenius only a fourth-class rating for his Ph.D. dissertation entitled "On the Dissociation of Substances in Aqueous Solution." The idea of his new "ionic solutions" was just too much for some scientists to swallow. The Upsala professors couldn't understand the new concept, so they brought vicious attacks against it, and against the new professor.

But Arrhenius was certain he was correct and soon he teamed up with two other crusaders: the energetic Wilhelm Ostwald and the visionary Dutchman, Jacobus Hendrick van't Hoff. Bernard Jaffe, in his book, *Crucibles - The Story of Chemistry* (Fawcett, with Simon & Schuster, Inc.), wrote of van't Hoff: "van't Hoff was a dreamer with a mind that leaped above the common place facts of chemistry and dared postulate new ideas." (van't Hoff too, met with stubborn opposition wielded against the new field of stereochemistry, which he founded.)

Even the eminent Lord Kelvin (proposer of the absolute temperature scale in 1848) had trouble with these revolutionary ions, as did the great chemical prophet, Dmitri Mendeleev (Periodic Table of the Elements, 1869) though not as vehemently. Nevertheless, the Ionic War was waged, and finally won. By 1900, all was well with the world of electrolytic solutions. History has probably forgiven the staunch enemies of the new science of solutions formulated by Arrhenius. (Now, we look back and smile at the whole affair.)

But it also is true that history remembers the names of those three Ionians who won an important battle for all of science. (All three were eventually awarded the Nobel Prize.) Most scientists, however, cannot name the professors of Arrhenius who almost succeeded in terminating his career as a chemist.

The history of science seems to be replete with the kind of heretical scandal initiated by Arrhenius, which is to say that science has a way of discovering, improving and even revolutionizing the understanding of its own domain—that of the physical universe. If a new discovery tears down a mountain at which the majority of tradition-bound scientists worship, so much the better, if it leads to a broader understanding of things. How boring to graze in the same old pasture of "final physics" while a fresh, wider field beckons the inquisitive mind to depart familiar, comfortable spaces.

The saber-toothed opponents of Arrhenius were suffering from what cold fusion scientists today call "paradigm paralysis." This term has been rightly used by cold fusionists, given the backdrop of overwhelming positive data, to counter unyielding accusations by skeptics. You know what a paradigm is (besides equaling four U.S. nickels or a "pair of dimes"). A paradigm is a set of ideas, definitions, procedures, patterns, or rules that influence any sort of activity. Paradigms often govern by saying, "that is the way we do things because that's the way it is." Not all paradigms are bad, but the really stifling ones can be overcome only by maintaining an open mind.

An example of a wise paradigm is: "Don't go flying with waxed wings on a warm summer day." The Greek fellow Icarus forgot that. Too much solar excess heat on his flappers landed him in the drink. Ironically, the same sea (containing 0.015% deuterium oxide) that was Icarus' demise could bring a revolution in air travel (cold fusion jets) and a whole lot more. It has been estimated that a cubic mile of sea water has more potential cold fusion energy than all of the oil reserves on Earth. Twenty cents worth of heavy water, sometimes called "Norwegian Water" (to make up for the earlier Swedish dig), might not take you from where you are to Athens, but it certainly will get you off the ground. In fact, spend a pair of dimes on heavy water and you will have enough fusion fuel to supply the energy to a typical home in Minnesota (Go Vikings!) for two months. That should impress the British. And it does!

The British Broadcasting Corporation (BBC), in collaboration with cold - fusion programming pioneers in Canada (the Canadian Broadcasting Corporation, or CBC), aired the hour long "Too Close To The Sun" in early spring, 1994. This cold fusion enthusiast (sorry skeptics, no apologies) had a chance to view this very objective piece of future historical video documentary for the first time in July 1995. Of course, viewing this winning program more than fifteen months later gave me a light-year of added perspective: That musing about the physics of waxed-wing flight (as the interviewed skeptics seemed to keep circling around with) while jet aircraft are whizzing overhead, told me that the producers were—for the sake of their general audience—going out of the way to be "fair and objective." I'm sure that the next cold fusion TV documentary will place the naysayers, if they're mentioned at all, in the category of Ancient History along with Greek dudes who—unlike the CF debunkers—at least had the courage to try something new.

Speaking of courage, I was touched by the interview with Sheila Pons, the wife of Dr. Stanley Pons. She and her husband candidly revealed the inner struggle they and their children had to deal with as a family in moving to the south of France to continue pursuit of their cold fusion research. Shame on the U.S., when one of its own is willing to give up his citizenship (if needed) for what he knows to be true: the cold fusion effect.

Of course, we don't know if Icarus had a wife to consult before his flight. The story goes that he was fleeing imprisonment of some kind. But is that worse than the unfair abuse and calumny heaped upon Drs. Martin Fleischmann and Stanley Pons in the first couple years after their March 23, 1989 Utah announcement? Other cold fusionists have exhibited like courage and commitment, including the editor-in-chief of this magazine. It makes one wonder if the U.S. Patent Office and Department of Energy—plus a collection of too many unimaginative and, let's be honest, protective physicists—were in charge of inventing the light bulb, that you might be reading this article by the light of a kerosene lamp!

New Energy Times Archive

And yet, "Too Close To The Sun" did leave the viewer with the impression that "something is going on," that cold fusion is real and probably will be widely commercialized in the near future. That also was the conclusion of Bechtel Power Corporation engineer Bruce Klein. His talk at ICCF5 in Monaco, April 1995, was printed in the second issue of Infinite Energy (May /June). Mr. Klein stated (p.27): "...the cold fusion effect in its various forms is real. There exists sufficient experimental evidence at this time that this issue no longer needs to be addressed. It is not justified to devote additional resources to demonstrate the existence of the effect." And that from a practical engineer in the power industry—not simply from a "believer."

Although the CBC/BBC production gave footage to the critics, those critics may have put a foot in their mouth. The program made clear, I think, that certain stubborn critics have really hurt this new science from the very beginning, and have hurt some people along the way. We were left with the impression that the hard skeptics are behind the times. Recent comments by industrial realists like Bruce Klein should be the final defanging of those enemies of science. So should working devices such as the Patterson Power Cell and the Potapov device (if it is ultimately validated), both born too late for the 1994 TV documentary.

Isn't it time more U.S. scientists and their financial supporters (which includes Federal tax dollars supposedly not in the hands of a select and prejudiced few) get busy and do what their Creator gifted them to do? Shouldn't they use their talents to research, experiment and engineer this exciting new science and energy source (with its huge potential for benefiting mankind), instead of hanging out in the wax museums of old physics?

True, early skepticism was appropriate. It is a healthy and necessary requirement in all science. But a lot of water has flowed through the calorimeters since 1989. If I was disappointed with any part of this CBC/BBC presentation, it was the omission of other very important CF research besides the classical Pons-Fleischmann electrolysis and the Mills light water work, which I thought was well described. Realistically, a 50-minute program cannot cover everything. But believe it when E-Quest Sciences in Palo Alto, California, for example, presents its very sound data from sound-generated fusion. Up to 500 watts out with 100 watts in—and sometimes melting the palladium at 1550 °C. Also, sustained levels of high power output. Now that's something to blow your trumpet about!

In "Too Close To The Sun" there was some of the redundant "where's the nuclear ash?" from the critics. Perhaps the producers could have interviewed Roger Stringham and Russ George at E-Quest Sciences, who have repeatedly measured helium-4 at levels nearly commensurate with their abundant excess heat. Or, they could have talked with Dr. Melvin Miles of the U.S. Naval Air Weapons Center at China Lake, California, who also has accumulated very reliable helium data.

No, perhaps the nuclear products, which include much more than helium-4, are not quite correlated, so far, with amounts of excess heat. But at this stage is that the only concern in this new hydrogen energy? Does the airline industry care about developing heat-resistant wax? People are flying. And cold fusion will fly, too.

Silent-running electric race cars might not attract crowds to the Indianapolis 500, but a highly efficient cold fusion-powered automobile is certainly in every motorist's future. Electric cars already are well designed for very reliable performance, using high-density batteries and super-capacitors for peak acceleration. The problem has been having a long enough extension cord. Onboard CNF battery chargers would solve that. And the fuel is almost free. You will "fill her up" just once—when you buy the car. Your new car will go 55 million miles on a gallon of heavy water! So predicts IE contributing editor Jed Rothwell. (Therefore, keep plenty of car wax on hand.) How does taking a "nuclear spin" on a Sunday afternoon in your Ford Fusion, Pontiac Palladium, Dodge Deuteron or Mazda Millennium sound? In places like Los Angeles, that has the sound of a dissipating smog.

"Too Close To The Sun" began with a scene of Ohio inventor Stanley Meyer's garage. Out came a allegedly water powered car, a dune buggy. We aren't told much about how it actually works, but it looked impressive. Later in the program we are told by Mr. Meyer that he can go 65 mph and get 60 miles per gallon. He said someone offered a billion dollars to sell out. If his "billion-dollar" technology is real—and Meyer has so far not allowed measurements by scientists to decide that, what will the licensing rights to a passenger car that runs on cold fusion power be worth?

So, what is the "bottom line" in cold fusion? Actually, there are several which were underlined in "Too Close To The Sun." The first line was drawn at the Massachusetts Institute of Technology. Drs. Eugene Mallove and Mitchell Swartz revisited data published by MIT over a year after the Plasma Fusion Center conducted its 1989 cold fusion experiments. The MIT group said "no excess heat." Were they giving the public and the press a "line"? The conclusion of Dr. Mallove, et al., is yes! The raw data (in the heavy water experiment curve) did not match the published data. In other words, a "skewed" graph was published instead. There was evidence of excess heat, but it was not published. The MIT project leader's explanation: Most published data in science are processed from the raw data, and accusations of manipulation are done by "those who don't understand how measurements are made." (Really? I want my money back!) No, I rather think the illustrious MIT group committed a terrible injustice at that time—a "travesty," to use Dr. Mallove's words from the program.

The second line is an historical quotable quote from the chairman of the 1989 Department of Energy (ERAB) report on cold fusion, which effectively told all cold fusionists to "stay out of Washington." According to this well known critic, what was being reported in 1989 from cold fusion labs was "contrary to everything we have found out about nuclear physics over the last 50 years." Conclusion: We know it all! There is nothing more to learn, nothing new under the Sun. But, in fact, it is obvious that there are new things under the Sun. In the case of cold fusion, it is the sun ... in a bottle.

The third bottom line is being sketched by the Japanese. The viewer was able to visit with Dr. Keiji Kunimatsu, President of IMRA—Japan in Hokkaido. Dr. Kunimatsu, once a student of Dr. Fleischmann, acted as a go - between to bring in the visionary Minoru Toyoda (Toyota Motor Corporation), who evidently did not have a chance to read the 1989 ERAB report, and therefore committed several million dollars to this New Hydrogen Energy. The new paradigm in physics called cold fusion had found a buyer. And IMRA-Europe and IMRA-Japan gave Pons and Fleischmann a new beginning.

Near the end of the program we return to Japan. It's Christmas 1993. There is a celebration of the "marriage" of Japanese business to cold fusion, and a kind of "til death do us part" commitment to perfecting the new science. Drs. Pons and Fleischmann are the guests of honor. There is talk of scaling up the process in well planned steps over the long term.

New Energy Times Archive

Around a table of food and beverage they drink a toast to "the audacious idea of flying too close to the Sun." Dr. Fleischmann, who has no doubt waxed philosophical many times before, is heard saying, "Our wings are stuck on with Superglue!"

A final around-the-horn wrap up of interviews at the end of the broadcast included another stop at Cornell University and Prof. Bruce Lewenstein, curator of the Cold Fusion Archive: "[it is] mainstream science now and includes real professional scientists who are continuing to investigate cold fusion, a legitimate area of research." Perhaps that view is the summary bottom line to be gotten from "Too Close to the Sun."

The final scene has Dr. Fleischmann purchasing a French cake at a market in Valbonne. He walks away from the camera through a short tunnel connecting sections of the street. Is there light at the end of the tunnel? Most certainly! It is the light of the Sun in a bottle, and all of the other ramifications of a young, vivacious, growing science. In a future cold fusion documentary, the last scene might be filmed at the Tomb of the Unknown Skeptic. But let's hope not. Instead, we welcome their talents to join the revolution. It only costs a paradigm.

I conclude this review where it began, in Sweden. It is accurate to say that the energetic Svante Arrhenius provided a breakthrough in electrochemistry, but electrochemists Martin Fleischmann and Stanley Pons have provided a breakthrough in energy.

I believe history will record it that way.

On cold fusion:

"I think that, broadly speaking, it's dead, and it will remain dead for a long, long time."

Editor John Maddox
***Nature* Magazine**
in 1990

NUCLEON CLUSTER STRUCTURES IN BETA-STABLE NUCLIDES

R.A. Brightsen
Clustron Sciences Corporation
1917 UpperLake Drive, Reston, VA 22091
Phone: 703-476-8731, Fax: 703-827-4066

A. BACKGROUND

A comprehensive treatment of "The Nucleon Cluster Model and the Periodic Table of Beta-Stable Nuclides," has been developed [1], and aspects of the model were discussed in the last issue of *Infinite Energy*. This article will discuss further the logic of cluster structures and, especially, negative or antimatter clusters.

In Figure 27 of Reference 1, all cluster values are arbitrarily shown as positive numbers. For example, Period I is as follows, where only NP values are given, for simplicity:

NP		(2)		1		4		7	Σ_{NP} 9	2		5		8		11		NP
T_L		(8 - 16)		1 - 2		10 - 20		18 - 38		14 - 28		22 - 46		28 - 64		36 - 82		T_H
C_S	NP	0 - 0	0	9 - 19	2	18 - 38	4	26 - 57	6 8	2 5 - 10	4	14 - 29	6	22 - 48	8	30 - 67	NP	C_S
T_H		8 - 16		17 - 36*		26 - 56		34 - 76		(4 - 8)		6 - 12		16 - 32		24 - 52		T_L
NP		2		3		4		5	7	2		3		4		5		NP

In this table, T_H is the heavy terminal and T_L is the light terminal.

It should be noted that the sum of the NP values on the left with those on the right, and the sum of the Σ_3 values (Σ_3 = NPN + PNP) on the left with those on the right, are constant for each period for each of the C_S values. Also, these sums differ systematically from one period to another in the following way:

Period	ΣNP		Σ_3	
I	8		17	
II	16		34	
III	24	ΔΣNP=8	51	$\Delta\Sigma_3 = 17$
IV	32		68	
V	40		85	

The NP and Σ_3 values for a given mass number, however, show a range. For example, ^{38}Ar (above) has an NP vlaue of 4 and 7, while ^{38}Ar in Period V (See Figure 27) has a value of 10. Thus, for ^{38}Ar, three equally acceptable positive NP structures are possible: 4, 7 and 10.

As another example, consider ^{6}Li, which can be described, equally validly, as follows:

NP	NPN + PNP = S_3
3	0 + 0 = 0
0	1 + 1 = 2

These examples and others lead to an inevitable conclusion - any beta-stable nuclide is not describable by a unique set of nucleon clusters, due to the following absolute equivalance:

Eq. 1: 3 NP = 1 NPN + 1 PNP

B. THE STRUCTURE OF THE PROTON

As has been previously observed in the NCM, beta-stable nuclear structures are described as systematically related combinations of NP clusters (mass = 2), as well as NPN and PNP clusters (mass = 3). A dilemma would, therefore, exist in describing the proton with a mass and charge of one, except for the application of the NCM. Clearly, if the NCM is applicable to the proton, negative values of clusters (i.e., antimatter) must be involved. The simplest formula for the proton is:

^{1}H

NP	NPN + PNP = S_3
-1	0 + 1 = 1

PASS THE WORD....
COLD FUSION LIVES!

New Energy Times Archive

Utilizing Eq. I, the following describes the series (all involving negative cluster values) for the proton:

^{1}H

NP	NPN + PNP = S_3				
-7	2	+	3	=	5
-4	1	+	2	=	3
-1	0	+	1	=	1
2	-1	+	0	=	-1
5	-2	+	-1	=	-3

Similarily, ^{6}Li and ^{38}Ar are described as:

^{6}Li

NP	NPN + PNP = S_3				
6	-1	+	-1	=	-2
3	0	+	0	=	0
0	1	+	1	=	2
-3	2	+	2	=	4
-6	3	+	3	=	6

^{38}Ar

NP	NPN + PNP = S_3				
10	4	+	2	=	6
7	5	+	3	=	8
4	6	+	4	=	10
2	7	+	5	=	12
5	8	+	6	=	14

Several key questions arise from these formulations. For example:

1. Where does the mathematical series (i.e., NP = 5, 2, -1, -4, -7) begin and end? The final answer, almost certainly, will come from a detailed analysis of the "missing matter" issue. Pending this analysis, it has been arbitrarily taken as $\Delta NP = 12$ ($\Delta A = 24$).
2. How can matter and antimatter clusters coexist in a nucleus without annihilation taking place? In the NCM, independent (unbound) neutrons and protons do not exist, and the nature of the mathematical series (deriving from Equation 1) makes it impossible for matter and antimatter clusters of the identical structure to exist. Thus, since annihilation can only take place between mirror images (i.e., identical matter and antimatter structures), annihilation cannot take place, only strong attraction, or bonding.
3. How can experimentally measured mass values be explained? Consider, as an example, the simplest fromula for the proton: NP = -1, NPN = 0 and PNP = 1. Clearly, there are 5 mass units involved, but the measured mass value is 1. A logical explanation requires an antigravity force, pushing antimatter clusters up (2↑) while normal gravity pushes matter clusters down (3↓). The net of these two forces is what is observed in the laboratory (i.e., 1↓). Thus, the NCM, if correct, demonstrates that antigravity does, in fact, exist. This conclusion accurately accounts for two outstanding cosmological issues:

a. The age of the universe [2]. Einstein's original cosmological constant (based on antigravity) is correct, i.e., the universe is 13-19 billion years old.
b. Antigravity in light mass nuclei accounts for the long-sought "missing mass" (antimatter) in the universe [3].

Note Added in Proof: Experimental Support for the Existence of Antimatter

One of the most widely accepted paradigms of classical nuclear physics is the inability of a low-energy particles (such as a proton or a deuteron) to penetrate the "coulomb barrier," due to strong electrostatic repulsion. At this point, in time, however, the experimental evidence to the contrary is overwhelming. In electrolysis (low energy) experiments, at least the following nuclei have been produced [for example, see References 4, 5]:

Stable Nuclides: ^{4}He, ^{40}Ca, ^{86}Sr, ^{88}Sr.

Radioactive Nuclides: ^{3}H, ^{103}Ru, ^{99}Rh, ^{100}Rh, ^{101}Rh, ^{101m}Rh, ^{102}Rh, ^{100}Pd, ^{106}Ag, ^{106m}Ag, ^{110m}Ag.

The Nucleon Cluster Model provides a unique and revolutionary answer to this puzzle: reactions between antimatter clusters in the proton and deuteron and matter clusters of the same type in the cathodes (and electrolytes) in electrochemical cells. For a comprehensive explanation, see [6].

REFERENCES:

1. "The Nucleon Cluster Model and the Periodic Table of Beta-Stable Nuclides" is available from Clustron Sciences Corporation. Due to its length, $5.00 is requested to cover copying and postage.
2. M. Bolte and C.J. Hogan, *Nature*, **376**, p.399 (1995).
3. M. Turner, *Proc. Nat. Academy of Sciences*, **90**, p. 4827 (1993).
4. T.O. Passel, Fifth Int. Conference on Cold Fusion, Monaco, April 9-13, 1995. See also, *Proceeding of the Conference on Low Energy Nuclear Reactions* (Ref. 6).
5. R. Bush and R. Eagleton, *Fusion Technology*, **26**, p. 344, December 1994.
6. R.A. Brightsen, *Infinite Energy*, 1, No. 3, p. 13-15, July/August 1995. See also the *Proceedings of the Conference on Low Energy Nuclear Reactions* (Texas A&M University, 6119/95), published by Fusion Information Center, 540 Arapeen Drive, #209, Salt Lake City, Utah 84108.

Potapov Thermogenerator Update

In the last two issues of *IE*, we devoted considerable attention to the Potapov "Thermogenerator" cavitation devices from Moldova. We are still not able to make a final judgement on the validity of Potapov's thermogenerators. Chris Tinsley *did* go to St. Petersburg, Russia to help launch an extensive testing program. This effort is now underway, but is proceeding far more slowly than we had anticipated. It involves testing a Yusmar in a large room with an inner plastic heating chamber — in effect, a room-within-a-room calorimeter. Since these tests have not been completed, this month we offer the following reports from Russia—both positive and negative ones.

Author and researcher Mr. Christopher Bird of Blairesville, Georgia in the U.S. was kind enough to translate all of these from their original Russian. — *The Editors*

"ENERGIYA"
S. P. Korolev
Rocket-Cosmic Corporation

141070 Kaliningrad, Moscow Region
4-A Lenin Street
Telex: "GRANIT"
tel: 513-3655
Fax: (095) 187-9877

1 December 1994 No. 77-6/33

CONCLUSION

Four models of a "Yusmar" heat-generator, recommended by its inventor, Yu. S. Potapov, for heating residential premises, cottages, greenhouses, and industrial buildings, were put to test by Rocket-Cosmic Corporation experts.

The testing of the heat-generators confirmed their high effectivity in comparison with other types of heaters (electric, gas and solid fuel) with respect to their design and their dependability. The high effectivity of the heat -generators is due to interconnected physico-chemical and hydraulic processes that take place in them; we are perhaps dealing here with a "synergistic" phenomenon in which the resulting effect is significantly greater than what goes into it.

On the whole, the units for heating liquids incorporating the Yu. S. Potapov heat-generators are econom-

New Energy Times Archive

ical and ecologiclly clean. Their unfailing operation is guaranteed over a fairly long period (15 years) and the water requires no special preparation. We know of no other product that has greater consumer appeal or long-range prospects.

/s/ V. P. Nikitskii, Dr. of Technical Sciences, Deputy General Design Engineer, Head of the Scientific-Technical Center

---

"ENERGIYA"
S. P. Korolev
Rocket-Cosmic Corporation

141070 Kaliningrad, Moscow Region
4-A Lenin Street
telex "GRANIT"
Tel: 513-8655
Fax: (095) 187-9877

13 January 1995 No. 77-6/2

Yo. 5, Potapov Director General, "YURLE-K" LTP and President, "VISOR" Scientific-Technical Works

The "ENERGIYA" Rocket-Cosmic Corporation's Scientific Technical Center has examined materials presented for testing a heating system (document dated 17 June l994, protocol dated 12 August 1994) for use as a source heat in a device to heat liquids (Republic of Belarus patent no. 359, dated 12 January l994). A group of experts ran tests on the supplied equipment consistinq of a TG2 heat-generator, an ITsG12 5/50-4-2 electropump, piping, and a control panel for automatically regulating temperature.

Confirmed by the testing was the marked effectiveness of this system which, in our opinion, is the result of a complex of physico-chemical and hydraulic processes taking place in the heat generator. It is possible we are dealing here with a SYNERGISTIC phenomenon in which the resulting effect is significantly greater than the make-up of its components. The elevated parameters of the heat-generator are also explained by unitary quantum theory. One should also note that the vertical twisting and turning in the currents are particularly complex and have not yet been sufficiently studied.

Under various conditions of regulation and adjustment the throttle (choke) settings [??], we determined that results, equivalently expressed in kVt, of the relation obtained between heat and electrical energy were in the range of 1.6 - 1.95.

To a degree, these impressive results are confirmed by research of Academician B. Titayev and scientists working with the "Pacific Ocean Marine Technology" group who are building somewhat similar heat generators.

We stand ready to cooperate with you to develop and present a whole integrated program of research on processes occurring in the heat-generator and, on that basis, to determine and define what would be technically necessary for constructing special equipment to allow for its installation on board spaceships.

/s/ V.P.Nikitskii
Deputy General Design Engineer
Head of the Scientific-Technical Center

"DELOVOI MIR"
("BUSINESS WORLD")
Trading Company

103009 Moscow
6 Degtyrnyi Pereulok
Building 1 Room 401
Tel/Fax: 972-8735

BUSINESS PROPOSAL

The "DELOVOI MIR" Trading Company proposes to sell four kinds of heating systems with the latest "YUSMAR" heat generators. The "YUSMAR" heater, a most recent technological development has no analog anywhere in the world.

This invention of simple design and construction is fairly easy to operate, ecologically clean, economical and reliable, as corroborated by an applicable test protocol. This new system and heat generator is protected by patents issued in Moldava, Belarus, Russia, France and other countries.

The heat generator is intended for transforming the energy in liquids moving within it into heat for heating residential, industrial, storage and other buildings in which heat produced by heating water is possible. The area heatable runs from 100 to 1000 cubic meters.

The heating system (see attachment) is of standard manufacture: an electro-pump, piping, a thermocouple, electric switches. This system has the approval of all regulatory agencies, including those dealing with the environment and epidemiology etc.

In addition to the acquisition of single heat generators and systems we can propose a licensing agreement for the production and sale of heat generators. Its cost is $200,000. The purchaser of a license will be afforded complete technical documentation, technological specifics for manufacture, as well as all literature necessary for organizing the manufacture of heat generators.

Conditions for delivery of a heat generator follows:
--signing an agreement
--100 percent payment in advance
--receipt of product within three months following payment

A demonstration of a working heat generator takes place each Thursday at 17:00 hours (5:00 PM) at Staropanskii Pereulok, Building 1, the editorial offices for the "DELOVOI MIR" newspaper (Metro station: "Revolution Square").

Please address all questions to: Degtyrnyi Pereulok, Building 6, Room 401 (Metro station: "Pushkin") Tel/fax: 972-8735.

Director General V. Danidov

"I claim"
DIRECTOR [illegible word) ANPM
(signature) YERMILOV
(date, illegible) 1994
City of Kishinev

(sealed wlth the seal of the Moldova Republic etc.)

PROTOCOL for testing of the "YUSMAR - I" system

Measurements taken on the sytem of heating using the "KOMAR -I" heat generator, with the following technical parameters:

1) Volume of liquid in the system 32 liters
2) Heat (thermal) load 7 kWt
(12 convectors of 0.42 kWt plus piping, generator, electro-pump)
3) Output of electric motor 4 KWt
4) Ambient temperature +20 C

5) Pressure 45 meters
6) Consumption of liquid 12 cu. m/hr
7) Electric motor revolution 2900 rpm
8) System operating time 60 minutes
9) KPD (Russian letters) for electro-pump 34 percent
10) Starting temperature of the liquid (??)-7° C

As a result of the test carried out the temperature of the liquid in the system attained +68 C in 60 minutes The difference in temperature between that supplied and that processed was 4 °C.

It was established that the liquid passing through the heat generator

New Energy Times Archive

puts out heat singnificantly ??? [novyshaya KPD sistemy)

Witnesses to the testing:

Drs. of Technical Sciences;
/s/ Yu. V. Ivnaov
/s/ A. E. Gitlevich
/s/ Yu. S. Potapov
/s/ S. G. Sabeyev
/s/ V. M. Fomin

The origin of the following negative document is not marked:

Preliminary conclusions on the "YUSMAR" Heat Generator

1) Judging f rom its description and the results of its testing, the "YUSMAR" heat generator is a device for the conversion of mechanical (kinetic) energy, caused by motion in liquid, into heat. Such a process always takes place during motion in liquid by using the dissipation of energy from the internal friction between the interacting layers of liquid and from the friction of the liquid in the confining surfaces. The process becomes more intense when vortexes (twisting and turning) or breaks appear in the current.

2) This process is sometimes used in technology, mainly in cases when it is necessary to accumulate heat in aqueous contours [loops? - Ed.] and when it is difficult to introduce heat from an external source. A typical example would be the heating of water in the first contour of an Atomic Energy Station due to the operation of the main circulating pump during the [Russian word: obkatki ??] of the contour when the nuclear reactor is discharging heat.

3) By virtue of the physical nature of these processes, and the fact that they have to obey the law of the conservation of energy, the energetic effectiveness of such a system can never be higher than 100 percent. If one takes into consideration the KPD [Russian letters ??] for the conversion of electrical into mechanical energy during the operation of an electric-motored pump, then the effectiveness will be even lower. In our view, it is due exactly to this circumstance that such systems, which moreover demand substantial outlays of capital, are not widely used in technology

Basically this question has to be decided on the basis of a technical-economical analysis in each specific case. For instance, if there exists surplus, and cheap, electro-energy and a pump "ready" for use, then such a system can be put to use.

4) To make an indirect statement, it is possible to confirm with approximate, or tentative, appraisals the characteristics of a heating system brought into operation by the use of the "YUSMAR" heat generator. As an example let's have a look at the modification of a "YUSMAR - I ."

Let's say that the volume of "small circle" circulation is 30 liters. Disregarding any heat losses during circulation in the "small circle" and supposing that the whole output of the electric motor is transformed into heat, let us evaluate the heating of water in an hour's time:

$$Q = n \times t$$

$$Q = G \times C_p \times \Delta T$$

$$\Delta T = \frac{N \times t}{g \times C_p} = 63 \text{ K}$$

This assessment has shown that the maximal speed of an increase in the temperature of the water is l degree/minute which more or less corresponds to the values set in no. 7 Table 1 of the operating manual.

Most like the characteristics of a heating system shown while in "operation" were obtained on the basis of tests that took place in Moldava, ie. a region with a warm climate. Let us assess the losses of electro-energy in one room of 20 K (area 20 sq.m., volume 50 cu.m.) when there is no heat loss. The assessments indicated that the losses of electro-energy came to about 383 X 10 kWt/hr. Saying that this kind of warming took place over a period of one hour, we get the required output of 0.36 kWt. Taking a working regime of 50 percent, we get an output for a source of heat under such conditions of 0.18 KWt. The indicated quantity is also close to the characteristic set down in no. 6 of the manual (0.1 to 0.2 kWt).

Thus, our fulfillment of the appraisal has shown that the characteristics of the system set forth in the manual that takes into account the assumptions made agree with existing notions about energy transformation processes.

5) Taking into account what has been expounded above, any answer to the question of the possibility of an effectivness > 100% must he in the negative.

Continued from page 52

be the impact on our entire nuclear power programme if such a discovery has indeed taken place. Let us assume that by the year 2000 the cold fusion cornmunity comes up with a device in the market place producing power in modules of 10 to 20 KW, using only ordinary water or at best heavy water, as "fuel." Is it not going to have a deep and direct impact on the decision making authorities responsible for allotting funds for various R&D programmes related to future nuclear power generation technologies?

One of the most important features of Cold Fusion type devices is their potentially small capacity, namely 10 to 20 KW range, ideally suited to serve the needs of a single home/family. It is therefore of appropriate size for mass production by private industry. Patents of the original inventors/enterpreneurs would be bought over by some of the large industrial houses such as Toyota, Mitsubishi, Fiat corporation and so on, who would then help launch cold fusion devices in world markets. This is the vision of the unfolding scenario, regarding emerging cold fusion technology.

In this context it is worth remembering that an automobile is essentially a type of "power plant" converting chemical energy of fossil fuels to mechanical energy and to some extent even electrical energy (the dynamo in the car). Taking the case of the Indian automobile industry as an example, I understand that the annual production of four wheelers in India is about 400 thousand units. If we take a conservative figure of 12 KW for the power capacity of an automible engine, we arrive at a figure of ~5000 MW of new power generation capacity being added every year by the Indian automobile industry alone! Remember that in an automobile hardly 20 percent of the total investment towards its power plant. Automobile manufacturing factories have been set up in as short a time as 18 months by some of the major industrial houses of Japan, USA and Germany for example! The essential point I am driving at is that the small size of cold fusion based power generators makes it ideally suited for exploitation by private industry. Going by what we have witnessed in the electronics industry, particularly the personal computer revolution, it is envisaged that intense competition is going to propel invention and innovation leading to rapid technological advance in the marketplace. Cold Fusion therefore need not wait for government operated R&D programmes which we all know take their own time to bear fruit! The first commercial cold fusion systems are expected to be simple heaters for hot water and home heating during cold winters and may even be employed for air conditioning units in tropical countries.

It is therefore obvious, that if what I claim is indeed true, namely that a new and fundamental revolution has taken place in physics and that a new method of releasing nuclear energy inside hydrided/deuterated metallic lattices in a "clean way" has already occurred, then I am sure that most people will agree with my contention that this singular invention is going to upset all our calculations and projections in the time frame of the next 25 years!

The only question to be answered is whether the claims of the cold fusion community are in fact true. Recently at BARC a group of about 50 scientists engaged either full time or part time in cold fusion studies, got together and formed a "Cold Fusion Forum." A half a day informal Seminar on "Current Cold Fusion Research at BARC" was organized on June 22nd, 1995. If there are still some doubts regarding the reality or importance of cold fusion, a study group of young scientists in the age group of 35 to 45, may be appointed to independently go though all the literature which has been generated in the past six years in the area of cold fusion in order to independently assess the status of the subject.

I strongly recomillelid that we should admit the possibility of occurrence of new breakthroughs in nuclear energy technology and in order for DAE not to be left behind in this fascinating new science, it should do everything possible to encourage young scientists to take up such studies. Luckily cold fusion research does not cost much; it is inexpensive research, and very interestingly BARC has the right background to emerge as the premier cold fusion research centre of the world! Besides, since the new field is just growing, there is also the prospects of staking many original patents in the field, leading to possible financial pay-offs for the institution in the future.

New Energy Times Archive

For an Excellent Introduction to Cold Fusion and New Energy Technology.....

ORDER THE ACCLAIMED VIDEO TAPE SET OF

MIT COLD FUSION DAY- January 21, 1995

at the Massachusetts Institute of Technology

Four (4) two-hour VHS video tapes—**8 hours total viewing**— are available as a set, or individually. These were only slightly edited from professionally taken video footage of the day-long Cold Fusion session at MIT on January 21, 1995. The tapes include the following material:

TAPE#1 ⟶

Dr. Eugene F. Mallove
(Cold Fusion Technology, Concord, NH)
"Cold Fusion and New Energy Technology - An Overview"
Dr. Peter Graneau
(Northeastern University Center for Electromagnetic Research)
"Anomalous Forces in Water Plasma Explosions"

TAPE#2 ⟶

Buford ("Ray") Conley
(MIT, graduate student, Dept. of Aero/Astro Eng.)
"Light Water Excess Heat Experiments"
Fred Jaeger
(ENECO, Salt Lake City)
"Patents and Commercialization"
Professor Peter L. Hagelstein
(MIT Dept. of Electrical Engineering and Computer Science)
"Cold Fusion: What We Know and What We Don't Know"

TAPE#3 ⟶

Professor Peter Hagelstein
(CONTINUED from TAPE #2)
"Cold Fusion: What We Know and What We Don't Know"
Professor Keith Johnson
(MIT Dept. of Materials Science and Engineering)
"Progress in the Theory of Excess Heat" *and*
Excess Heat- The Movie, now being made by Hollywood!
James L. Griggs
(Hydro Dynamics, Inc., Rome, Georgia, USA)
"The Hydrosonic Pump: Excess Power and Other Effects"

TAPE#4 ⟶

Bertil Werjefelt
(PolyTech(USA), Hawaii)
"Energy from Magnetic Materials and Magnetic Fields"
Dr. Eugene F. Mallove
(Cold Fusion Technology, Concord, NH)
Concluding Remarks

The tapes include the speakers' presentations as well as question and answer sessions. There is footage of the Hydrosonic Pump under test as well as close-up footage of rotor surface melting effects. Bertil Werjefelt shows footage of experiments in his own laboratory. There are scenes of Japanese researchers from Sumitomo, Hitachi, and other companies and universities now involved in their claimed extraction of energy from magnetic materials. These efforts are now said by these researchers to be proceeding toward commercialization. Actual experiments are seen in progress. The tapes are VHS cassettes in NTSC format and range from 120 to 127 minutes each.

To order **the full set of four, two-hour tapes**, please send check or money order to Cold Fusion Technology for **$79.95 plus $5.00 shipping and packing, within U.S. and Canada.** [For other foreign orders, please replace the $5.00 shipping fee with $30.00 for air shipment.] To order *individual tapes*, please specify which tape(s). Please send check or money order for $25.00/tape, plus $3.00 shipping and packing if only one tape, or $5.00 total if more than one tape. Tapes are Copyright 1995, Cold Fusion Technology.

Please send payments to: **Cold Fusion Technology**
P.O. Box 2816, Concord, NH 03302-2816
Fax: 603-224-5975, Phone: 603-228-4516.

••SPECIAL NOTICE••

IF YOUR SUBSCRIPTION BEGAN WITH THE *PREMIER* ISSUE (MARCH/APRIL 1995), TWO (2) MORE ISSUES OF *INFINITE ENERGY (#5 & #6)* WILL BE COMING YOUR WAY.

WHY NOT RENEW YOUR SUBSCRIPTION NOW?

ENJOY ANOTHER YEAR (SIX MORE ISSUES) AT THE SAME LOW PRICE....

$29.95 FOR U.S. AND CANADA
$49.95 FOR OTHER FOREIGN

New Energy Times Archive

SUBSCRIBE TO THE LEADING PUBLICATION →

Infinite Energy

Cold Fusion and New Energy Technology

(ISSN 1081-6372)

Eugene F. Mallove, Sc.D., Editor-in-Chief and Publisher

INFINITE ENERGY magazine premiered with the March/April 1995 issue, which was distributed to the participants of the Fifth International Conference on Cold Fusion (ICCF5), held in Monte Carlo, Monaco (April 1995). The May/June 1995 issue was sent to many hundreds of current subscribers, journalists, and libraries. Issues #3, July/August 1995, and #4 (Sept./Oct. 1995) had an even larger audience. The magazine now has limited distribution on select U.S. newsstands and is expected to expand greatly in 1995. *IE* is presently subscription-driven through ads in national U.S. magazines.

INFINITE ENERGY is an international technical magazine with outreach to the general public as well. It is written at the technical level of *Scientific American* or *Science News*. To maintain the highest editorial standards, it is written and edited by scientists, engineers, and expert journalists. It is aimed at pioneering scientists, engineers, industrialists, and investors who are entering an exciting new R&D area. This continues to grow explosively, with significant involvement by corporations and institutions in the U.S., Japan, France, Italy, India, Russia, and China. New technology developments and scientific discoveries are being made monthly and reported in the peer-reviewed scientific literature. ***INFINITE ENERGY*** reports on the latest information that is now pouring in from research centers around the globe.

The **highly affordable** subscription price of this six-issues/year publication of general *and* technical interest is $29.95 for residents of the U.S. and Canada.

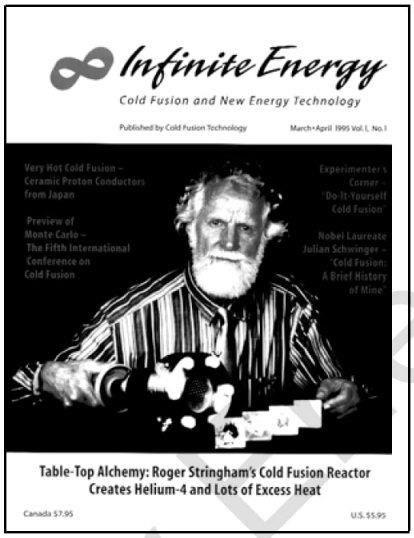

SUBSCRIBE TODAY!

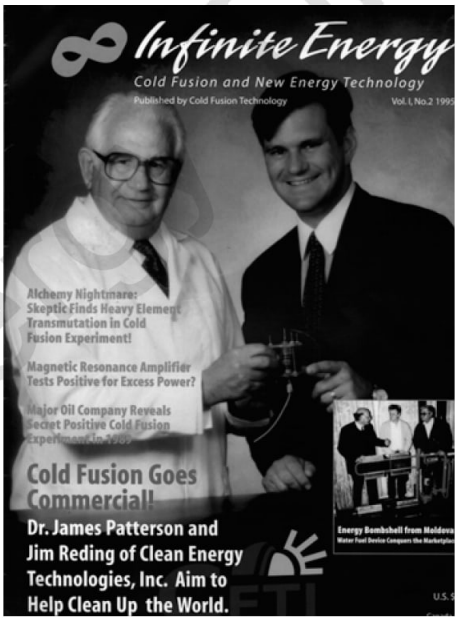

(To cover first-class air mail for other countries, the annual foreign subscription price is $49.95.) .

To subscribe to *INFINITE ENERGY*, beginning with Issue #1, Issue #2, #3, #4, or #5 (*Circle appropriate issue*), please enclose check or money order to Cold Fusion Technology, or enter Credit Card information:

Cold Fusion Technology
P.O. Box 2816
Concord, NH 03302-2816
USA

Name: _____ **Start with:** Issue #1, #2, #3, #4, or #5 (circle one)
Address: _____
Address: _____
City: _____ State: _____ Postal Code/Zip: _____
Country: _____ Phone: _____ Fax: _____
If using Credit Card: Check one: Master Card ____ VISA____American Express__
Card Number: _____ Expiration Date: _____
Signature_____ **Optional:** E-Mail address_____

Editorial contributions are requested and advertising space is available.
Fax: 603-224-5975; Phone: 603-228-4516 E-mail: INTERNET:76570.2270@compuserve.com

New Energy Times Archive